SERVICE MANUAL

ON/OFF

Wall mounted Type ARC-Series

HSU-07C03

Haier
Inspired living

splitoff.ru

Большая библиотека технической документации
http://splitoff.ru/tehn-doc.html
каталоги, инструкции, сервисные мануалы, схемы.

Table of Contents

1. Introduction..... 1
2. List of Functions 6
3. Specifications 7
4. Printed Circuit Board Connector Wiring Diagram 9
5. Functions and Control..... 11
5.1 Brief introduction to electric control function 11
5.2 Function of Main Thermistor.....14
5.3 Value of Thermistor.. 15
6. System Configuration 23
6.1 System Configuration.....23
6.2 Instruction.....24
7. Error Codes and Description.....39
7.1 Error Codes and Description.....39
7.2 TroubleShooting.....40
8. Installations.....42
9. Removal Procedure.....50
9.1 Removal of Air Filter.....50
9.2 Removal of Front Grille.....52
9.3 Removal of Drain pan.....54
9.4 Removal of Vertical Blades and Swing Motor 55

Все каталоги и инструкции здесь: http://splitoff.ru/tehn-doc.html

9.5 Removal of Electrical Box……..……..……..….....56

9.6 Removal of Heat Exchanger.....……..……..……..….....57

9.7 Removal of Fan Rotor and Fan Motor.....…..……..….....59

9.8 Removal of Outdoor panel...……..61

9.9 Removal of Heat Exchanger.....……..……..……..….....65

9.10 Removal of Fan motor and Fan.....……...66

9.11 Removal of fan motor bracket and partition……...67

9.12 Removal of compressor and heat exchanger ……...69

10. Appendix ……...71

10.1 Piping Diagrams……...71

10.2 Wiring Diagrams……...72

10.3 Circuit Diagrams……...73

Все каталоги и инструкции здесь: http://splitoff.ru/tehn-doc.html

1. Introduction

1.1 Safety Cautions

Be sure to read the following safety cautions before conducting repair work.

The caution items are classified into “Warning” and “Caution”. The “Warning” items are especially important since they can lead to death or serious injury if they are not followed closely. The “Caution” items can also lead to serious accidents under some conditions if they are not followed. Therefore, be sure to observe all the safety caution items described below.

About the pictograms

△ This symbol indicates an item for which caution must be exercised.
The pictogram shows the item to which attention must be paid.

○ This symbol indicates a prohibited action.
The prohibited item or action is shown inside or near the symbol.

● This symbol indicates an action that must be taken, or an instruction.
The instruction is shown inside or near the symbol.

After the repair work is complete, be sure to conduct a test operation to ensure that the equipment operates normally, and explain the cautions for operating the product to the customer.

1.1.1 Caution in Repair

Warning	
Be sure to disconnect the power cable plug from the plug socket before disassembling the equipment for a repair. Working on the equipment that is connected to a power supply can cause an electrical shook. If it is necessary to supply power to the equipment to conduct the repair or inspecting the circuits, do not touch any electrically charged sections of the equipment.	
If the refrigerant gas discharges during the repair work, do not touch the discharging refrigerant gas.The refrigerant gas can cause frostbite.	
When disconnecting the suction or discharge pipe of the compressor at the welded section, release the refrigerant gas completely at a well-ventilated place first. If there is a gas remaining inside the compressor, the refrigerant gas or refrigerating machine oil discharges when the pipe is disconnected, and it can cause injury.	
If the refrigerant gas leaks during the repair work, ventilate the area. The refrigerant gas can generate toxic gases when it contacts flames.	
The step-up capacitor supplies high-voltage electricity to the electrical components of the outdoor unit. Be sure to discharge the capacitor completely before conducting repair work.A charged capacitor can cause an electrical shock.	
Do not start or stop the air conditioner operation by plugging or unplugging the power cable plug. Plugging or unplugging the power cable plug to operate the equipment can cause an electrical shock or fire.	

Все каталоги и инструкции здесь: http://splitoff.ru/tehn-doc.html

Warning	
Do not repair the electrical components with wet hands. Working on the equipment with wet hands can cause an electrical shock.	
Do not clean the air conditioner by splashing water. Washing the unit with water can cause an electrical shock.	
Be sure to provide the grounding when repairing the equipment in a humid or wet place, to avoid electrical shocks.	
Be sure to turn off the power switch and unplug the power cable when cleaning the equipment. The internal fan rotates at a high speed, and cause injury.	
Do not tilt the unit when removing it. The water inside the unit can spill and wet the furniture and floor.	
Be sure to check that the refrigerating cycle section has cooled down sufficiently before conducting repair work. Working on the unit when the refrigerating cycle section is hot can cause burns.	
Use the welder in a well-ventilated place. Using the welder in an enclosed room can cause oxygen deficiency.	

1.1.2 Cautions Regarding Products after Repair

Warning	
Be sure to use parts listed in the service parts list of the applicable model and appropriate tools to conduct repair work. Never attempt to modify the equipment. The use of inappropriate parts or tools can cause an electrical shock, excessive heat generation or fire.	
When relocating the equipment, make sure that the new installation site has sufficient strength to withstand the weight of the equipment. If the installation site does not have sufficient strength and if the installation work is not conducted securely, the equipment can fall and cause injury.	
Be sure to install the product correctly by using the provided standard installation frame. Incorrect use of the installation frame and improper installation can cause the equipment to fall, resulting in injury.	For integral units only
Be sure to install the product securely in the installation frame mounted on a window frame. If the unit is not securely mounted, it can fall and cause injury.	For integral units only

Все каталоги и инструкции здесь: http://splitoff.ru/tehn-doc.html

Warning	
Be sure to use an exclusive power circuit for the equipment, and follow the technical standards related to the electrical equipment, the internal wiring regulations and the instruction manual for installation when conducting electrical work. Insufficient power circuit capacity and improper electrical work can cause an electrical shock or fire.	
Be sure to use the specified cable to connect between the indoor and outdoor units. Make the connections securely and route the cable properly so that there is no force pulling the cable at the connection terminals. Improper connections can cause excessive heat generation or fire.	
When connecting the cable between the indoor and outdoor units, make sure that the terminal cover does not lift off or dismount because of the cable. If the cover is not mounted properly, the terminal connection section can cause an electrical shock, excessive heat generation or fire.	
Do not damage or modify the power cable. Damaged or modified power cable can cause an electrical shock or fire. Placing heavy items on the power cable, and heating or pulling the power cable can damage the cable.	
Do not mix air or gas other than the specified refrigerant (R-410A / R22) in the refrigerant system. If air enters the refrigerating system, an excessively high pressure results, causing equipment damage and injury.	
If the refrigerant gas leaks, be sure to locate the leak and repair it before charging the refrigerant. After charging refrigerant, make sure that there is no refrigerant leak. If the leak cannot be located and the repair work must be stopped, be sure to perform pump-down and close the service valve, to prevent the refrigerant gas from leaking into the room. The refrigerant gas itself is harmless, but it can generate toxic gases when it contacts flames, such as fan and other heaters, stoves and ranges.	
When replacing the coin battery in the remote controller, be sure to disposed of the old battery to prevent children from swallowing it. If a child swallows the coin battery, see a doctor immediately.	

Caution	
Installation of a leakage breaker is necessary in some cases depending on the conditions of the installation site, to prevent electrical shocks.	
Do not install the equipment in a place where there is a possibility of combustible gas leaks. If a combustible gas leaks and remains around the unit, it can cause a fire.	
Be sure to install the packing and seal on the installation frame properly. If the packing and seal are not installed properly, water can enter the room and wet the furniture and floor.	For integral units only

Все каталоги и инструкции здесь: http://splitoff.ru/tehn-doc.html

1.1.3 Inspection after Repair

Warning	
Check to make sure that the power cable plug is not dirty or loose, then insert the plug into a power outlet all the way. If the plug has dust or loose connection, it can cause an electrical shock or fire.	
If the power cable and lead wires have scratches or deteriorated, be sure to replace them. Damaged cable and wires can cause an electrical shock, excessive heat generation or fire.	

Warning	
Do not use a joined power cable or extension cable, or share the same power outlet with other electrical appliances, since it can cause an electrical shock, excessive heat generation or fire.	

Caution	
Check to see if the parts and wires are mounted and connected properly, and if the connections at the soldered or crimped terminals are secure. Improper installation and connections can cause excessive heat generation, fire or an electrical shock.	
If the installation platform or frame has corroded, replace it. Corroded installation platform or frame can cause the unit to fall, resulting in injury.	
Check the grounding, and repair it if the equipment is not properly grounded. Improper grounding can cause an electrical shock.	
Be sure to measure the insulation resistance after the repair, and make sure that the resistance is 1 M ohm or higher. Faulty insulation can cause an electrical shock.	
Be sure to check the drainage of the indoor unit after the repair. Faulty drainage can cause the water to enter the room and wet the furniture and floor.	

Все каталоги и инструкции здесь: http://splitoff.ru/tehn-doc.html

1.1.4 Using Icons

Icons are used to attract the attention of the reader to specific information. The meaning of each icon is described in the table below:

1.1.5 Using Icons List

Icon	Type of Information	Description
Note:	Note	A “note” provides information that is not indispensable, but may nevertheless be valuable to the reader, such as tips and tricks.
Caution	Caution	A “caution” is used when there is danger that the reader, through incorrect manipulation, may damage equipment, loose data, get an unexpected result or has to restart (part of) a procedure.
Warning	Warning	A “warning” is used when there is danger of personal injury.
	Reference	A “reference” guides the reader to other places in this binder or in this manual, where he/she will find additional information on a specific topic.

Все каталоги и инструкции здесь: http://splitoff.ru/tehn-doc.html

2. List of Functions

Category	Functions	HSU-07C03	
Healthy negative ion	make your room full of an abundance natural negative ions.	N	
Left&right flow	With specialized motor and flaps, the airflow can be adjusted .	Y	
DRY function	Make dehumidifying in the room when the unit is working in the "DRY" mode	N	
Child lock	Avoid the child's wrong operation on the remote controller	Y	
3D air flow	The 3D airflow is able to deliver the airflow horizontally and vertically.	N	
24Hour timer	Use the timer function to set on,or off,or from on to off,or from off to on	Y	
Auto restart	automatic return to previous operation conditions after asundden power blackout	Y	
Easy clean design	The panel is easy to wash and the airflow vents can be detached easily	Y	
Intelligent air	With twin-blade technology ,the airflow can be adjusted not to blow directly	N	
Anti-mold filter	Catches most small particles and remove unpleasant odors effectively.	Y	
Sleep mode	The setting temprature and the indoor noise can be adjusted to a more comfortable level when you set the "sleep mode"during night sleep	Y	
O2 refresh	bring fresh air in and take unpleasant air out without tempreture and humidity loss	N	
4 Fan setting	Slect the fan speed LO,MED,HI,AUTO	Y	
Entire auto mode	You can set a tempreture value,with which the unit can be adjusted the operation mode automatically	N	
O2 fresh	It can bring the fresh air in when the machine is running in O2 fresh mode.	N	
Healthy UV ray	UV ray generator can eliminate and prevent bacteria in air effectively	N	
Bacteria-killing medium	3-in-1 effect:Anti-Allergen , Anti-Bactetia	N	
AIP	Purify the room by producing high voltage electric filed to absorb dusts	N	
VC layer	Release Vitamin C to keep health to the skin expecially.	N	
Auto mode	adjust the last fixed operation mode automatically.	Y	
ESF filter	Trap harmful dust and remove unpleasant odors effectively	N	
Power mode	Quick cooling or heating	N	
Soft mode	lower noise operation condition	N	
Negative ion filter	Generate negative ions by the filter.	N	
Constant temperature dehumidification	Make dehumidifying in the room while keeping the constant temperature inside	N	
Photocatalyst filter	Eminiates the air of a wide variety of odor-causing substances from cigarette smoke particles to chemical vapors	N	

Note: Y: Holding Functions

N: No Functions

Все каталоги и инструкции здесь: http://splitoff.ru/tehn-doc.html

3. Specifications

Model			HSU-07C03	
			Cooling	
Capacity Rated (Min.~Max.)		kW	2.10	
		Btu/h	7169	
		kcal/h	1806	
Moisture Removal		L/h	1.5	
Running Current (Rated)		A	3.4	
Power Consumption Rated (Min.~Max.)		W	720	
Power Factor		%	98	
COP Rated (Min.~Max.)		W/W	2.92	
Piping Connections	Liquid	mm	φ 6.35	
	Gas	mm	φ 9.52	
	Drain	mm	φ16.0	
Heat Insulation			Both Liquid and Gas Pipes	
Max. Interunit Piping Length		m	7	
Max. Interunit Height Difference		m	5	
Chargeless		m	5	
Amount of Additional Charge of Refrigerant		g/m	16	
Indoor Unit				
Front Panel Color			Mat Crystal White	
Air Flow Rate	m³/min(cfm)	H	6.8	
		M	6.0	
		L	5.2	
		SL	4.3	
Fan	Type		Cross Flow Fan	
	Motor Output	W	16	
	Speed	Steps	5 Steps, Silent, Auto	
Air Direction Control			Right, Left, Horizontal, Downward	
Air Filter			Removable / Washable / Mildew Proof	
Running Current (Rated)		A	0.15	
Power Consumption (Rated)		W	33	
Power Factor		%	96	
Temperature Control			Microcomputer Control	
Dimensions (H×W×D)		mm	265x795x182	
Packaged Dimensions (H×W×D)		mm	330x863x275	
Weight		kg	7.2	
Gross Weight		kg	10.2	
OperationSound	H/M/L	dBA	37/35/30	
Sound Power	H	dBA	37	

Все каталоги и инструкции здесь: http://splitoff.ru/tehn-doc.html

Outdoor Unit				
Casing Color			Ivory White	
Compressor	Type		rotary Compressor	
	Model		RECHI 44R193AE-FJS	
	Motor Output	W	680	
RefrigerantOil	Model		SUNISO 4GSI	
	Charge	L	0.27	
Refrigerant	Model		R22	
	Charge	kg	0.49	
Air Flow Rate (H/L)	m³/min		21	
	cfm		741	
Fan	Type		Propeller	
	Motor Output	W	60	
Running Current (Rated)		A	3.2	
Power Consumption (Rated)		W	700	
Power Factor		%	98	
Starting Current		A	18	
Dimensions (H×W×D)		mm	430x695x245	
Packaged Dimensions (H×W×D)		mm	505x848x363	
Weight		kg	22	
Gross Weight		kg	26	
OperationSound	H/L	dBA	54	
Sound Power	H	dBA	54	

Note: The data are based on the conditions shown in the table below.

Cooling	Heating	Piping Length
Indoor ; 27°CDB/19°CWB Outdoor ; 35°CDB/24°CWB	Indoor ; 20°CDB Outdoor ; 7°CDB/6°CWB	5m

Conversion Formulae
kcal/h=kW×860
Btu/h=kW×3414
cfm=m³/min×35.3

Все каталоги и инструкции здесь: http://splitoff.ru/tehn-doc.html

4. Printed Circuit Board Connector Wiring Diagram

Indoor Unit

1.1 Indoor unit

Connectors PCB

1) CN1 connector for transformer（primary coil）
2) CN2 connector for terminal block
3) CN3 connector for ransformer（secondary coil）
4) CN5 connector for louver motor
5) CN6 connector for ambient temp. sensor and piping temp.sensor
6) CN7 connector for receiver dislay
7) CN8 connector for indoor AC fan motor
8) CN9 connector for indoor AC fan motor

Все каталоги и инструкции здесь: http://splitoff.ru/tehn-doc.html

Other designations:

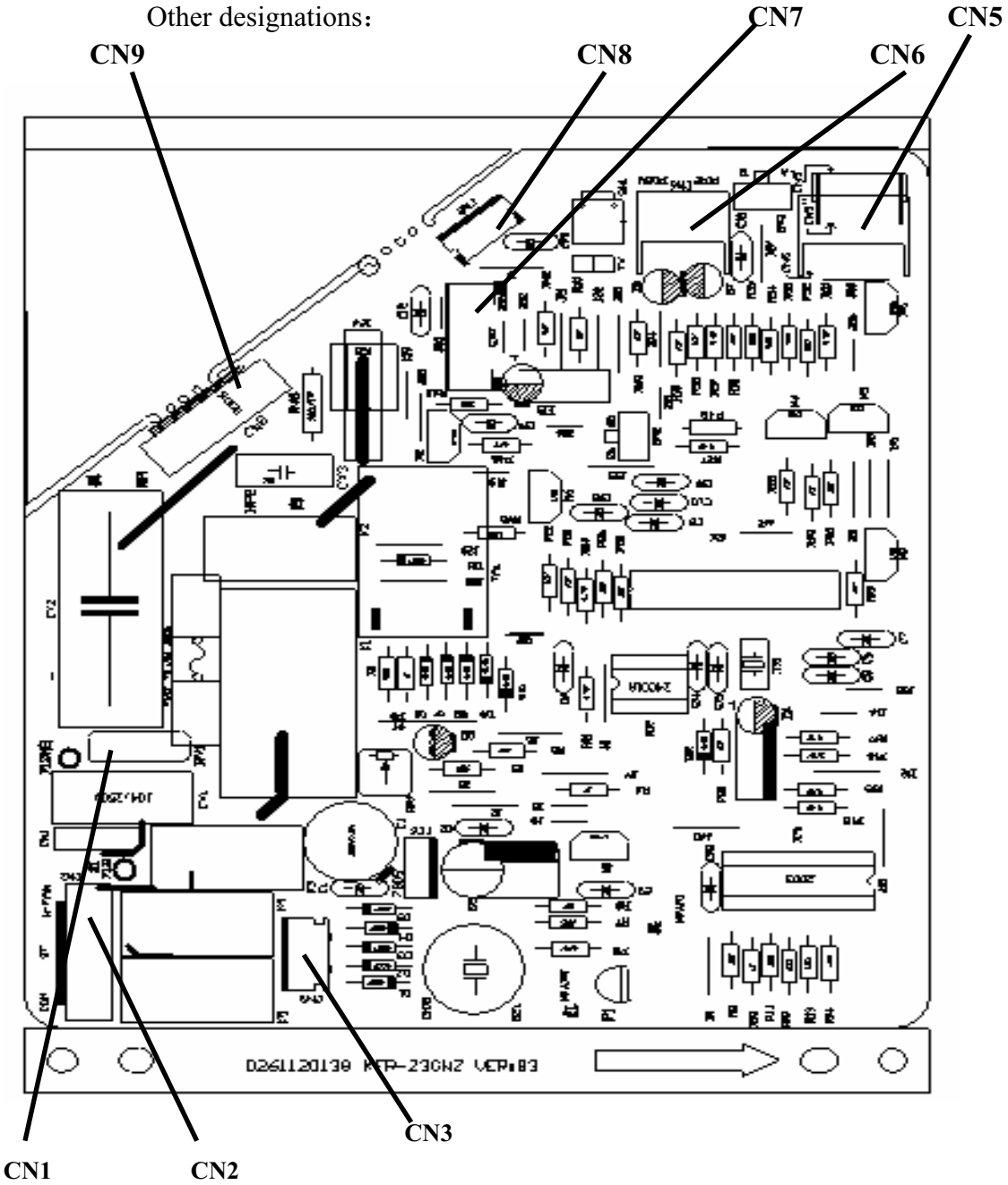

Все каталоги и инструкции здесь: http://splitoff.ru/tehn-doc.html

5. Funcitions and Control

Including brief introduction to air conditioners of series models and electric control function.

5-1 Brief introduction to electric control function

5-1-1 Automatic running

When the running mode is turned to automation after starting the system, the system will first determine the running mode according to the current room temperature and then will run according to the determined mode. Tr in the following selection conditions means room temperature, Ts means setting temperature, Tp means temperature of indoor coil pipe

Tr≥26℃ running refrigerating mode Ts=26℃
Tr<26℃ running fan mode

After turning to the automation mode, the running mode can be switched between refrigerating mode, fan mode and heating mode according to the change of the indoor ambient temperature.

5-1-2 cool running

when Tr ≥ Ts, outlet air from compressor is on and indoor fan motor run at fixed wind speed.
When Tr < Ts, outlet air from compressor is off ,
and when Tr > Ts, outdoor fan motor and compressor are on.

5-1-3 Dehumidification running

The compressor, outdoor fan and indoor fan will run as per the following working pattern so as to realize the refrigerating running of dehumidification:

① Tr> Ts+2℃, compressor, outdoor fan run continuously, indoor fan runs as per setting wind speed (State 1);

② Ts+2℃≥Tr≥Ts, compressor, outdoor fan run intermittently with 10 minutes ON, 6 minutes OFF. (Compressor and outdoor fan are synchronous) indoor fan runs in fixed lower wind speed, and will cease at the stand-by time of 3 minutes (State 2)

③ Tr <Ts, compressor, outdoor fan ceases, indoor fan runs in lower wind speed. (State 3)

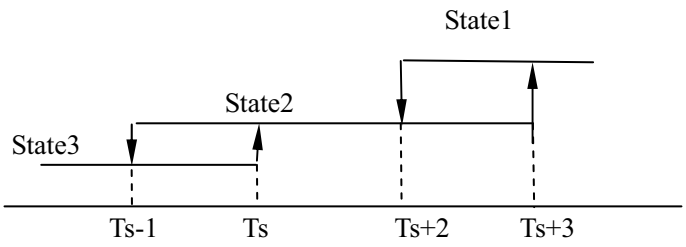

Все каталоги и инструкции здесь: http://splitoff.ru/tehn-doc.html

5-1-4 Freezing prevention function

Under refrigerating and dehumidifying state, the air conditioner will control the outdoor fan as per the temperature Tp of the indoor coil pipe according to the following conditions:

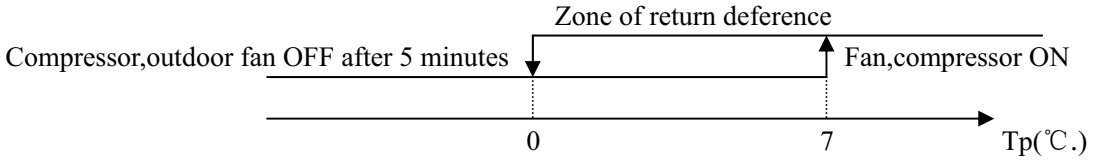

5-1-5 3 minutes stand-by time

When the compressor ceases due to the sensor OFF, unit On or OFF or fault, it will maintain pause for 3 minutes.

5-1-6 Compensatory function of power failure

If the unit is suddenly off during running due to power failure, or closed for maintenance or troubleshooting, it will restart to run after the power resumes with the original condition before the unit is off

Note: 1. Function setting: Pressing the SLEEP button on the remote control unit for 10 times until hearing 4 sounds from the buzzer on the panel.

2. Memory content: Running mode, setting wind speed, setting temperature, sleep state, flap state.

3. Cancellation of function: Pressing the SLEEP button on the remote control unit for 10 times until hearing 2 sounds from the buzzer on the panel.

5-1-7 Trial run function

When the air conditioner is in OFF state, press the emergency switch for 5 seconds till hearing 2 sounds of click from the buzzer, then the air conditioner will turn to the trial run state. The unit will run in the refrigerating mode and the indoor fan will run in high wind speed mode.

5-1-8 Emergency running mode

When the air conditioner is in stand-by state, press the emergency switch till hearing a sound from the buzzer, then the air conditioner will turn to the emergency run state. The rules of emergency run are as follows:

Tr≥26℃, running refrigerating mode, Ts = 26℃;

Tr<26℃, running fan mode,

Все каталоги и инструкции здесь: http://splitoff.ru/tehn-doc.html

5-1-9 Sleeping function

After setting the sleeping function, the refrigerating mode and dehumidification mode will run as per the following rules:

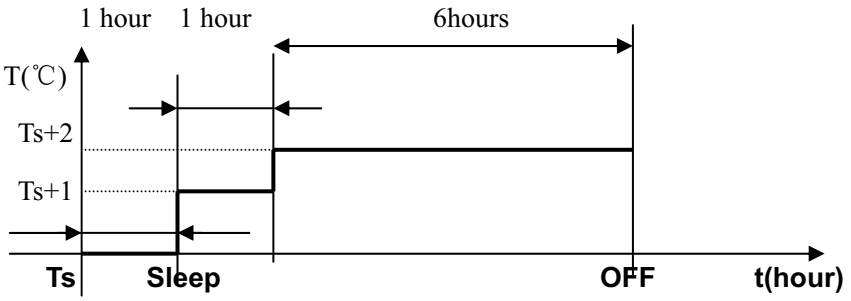

As shown in the above diagram, after running for 1 hour under refrigerating mode and dehumidification mode, the setting temperature will increase 1℃; after another 1 hour, it will increase 1℃ again, and after 6 hours, it will cease.

Все каталоги и инструкции здесь: http://splitoff.ru/tehn-doc.html

5-2 Function of Main Thermistor

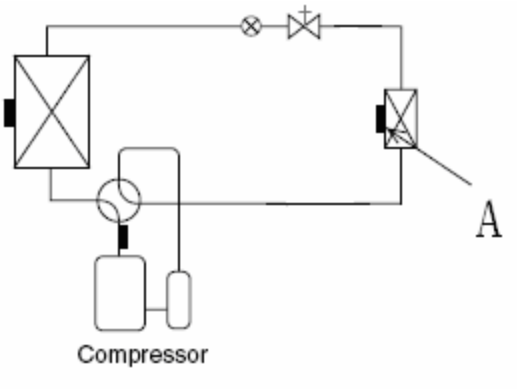

Note: A: Indoor heat-exchange sensor

Indoor heat-exchange sensor

The indoor heat exchanger thermistor is used for anti-icing control .During the cooling operation, if the heat exchanger temperature in the room where operation is halted becomes 0°C, it is assumed as icing.

Все каталоги и инструкции здесь: http://splitoff.ru/tehn-doc.html

5.3 Value of Thermistor

Indoor unit

Room sensor

R25℃=23KΩ±3.5%

B25℃/50℃=4200K±3%

Temp.(℃)	Max.(KΩ)	Normal(KΩ)	Min.(KΩ)	Tolerance(℃)	
-30	568.8372	501.0746	440.8435	-1.97	1.75
-29	530.9600	468.6491	413.1441	-1.95	1.74
-28	495.8488	438.5314	387.3645	-1.93	1.72
-27	463.2850	410.5433	363.3602	-1.91	1.71
-26	433.0683	384.5212	340.9980	-1.90	1.70
-25	405.0156	360.3153	320.1558	-1.88	1.69
-24	378.9588	337.7879	300.7211	-1.86	1.67
-23	354.7440	316.8126	282.5905	-1.84	1.66
-22	332.2300	297.2732	265.6686	-1.82	1.64
-21	311.2873	279.0627	249.8676	-1.80	1.63
-20	291.7969	262.0831	235.1067	-1.78	1.62
-19	273.6494	246.2437	221.3111	-1.76	1.60
-18	256.7445	231.4612	208.4122	-1.74	1.59
-17	240.9897	217.6590	196.3462	-1.72	1.57
-16	226.3000	204.7662	185.0545	-1.70	1.56
-15	212.5973	192.7176	174.4829	-1.68	1.54
-14	199.8093	181.4531	164.5813	-1.66	1.53
-13	187.8698	170.9169	155.3033	-1.64	1.51
-12	176.7176	161.0578	146.6059	-1.62	1.49
-11	166.2961	151.8284	138.4495	-1.60	1.48
-10	156.5532	143.1847	130.7973	-1.58	1.46
-9	147.4409	135.0863	123.6153	-1.56	1.44
-8	138.9148	127.4956	116.8717	-1.53	1.43
-7	130.9337	120.3778	110.5374	-1.51	1.41
-6	123.4597	113.7009	104.5852	-1.49	1.39
-5	116.4577	107.4349	98.9897	-1.47	1.38
-4	109.8953	101.5523	93.7278	-1.45	1.36
-3	103.7422	96.0274	88.7774	-1.43	1.34
-2	97.9708	90.8365	84.1185	-1.40	1.32
-1	92.5551	85.9574	79.7322	-1.38	1.30
0	87.4712	81.3697	75.6011	-1.36	1.29
1	82.6970	77.0544	71.7088	-1.34	1.27
2	78.2118	72.9937	68.0402	-1.31	1.25
3	73.9966	69.1712	64.5813	-1.29	1.23
4	70.0335	65.5716	61.3188	-1.27	1.21
5	66.3062	62.1807	58.2405	-1.24	1.19
6	62.7992	58.9853	55.3351	-1.22	1.17

Все каталоги и инструкции здесь: http://splitoff.ru/tehn-doc.html

7	59.4984	55.9729	52.5917	-1.20	1.15
8	56.3905	53.1320	50.0006	-1.17	1.13
9	53.4631	50.4521	47.5523	-1.15	1.11
10	50.7048	47.9230	45.2384	-1.13	1.09
11	48.1049	45.5355	43.0505	-1.10	1.07
12	45.6534	43.2808	40.9813	-1.08	1.04
13	43.3410	41.1509	39.0236	-1.05	1.02
14	41.1592	39.1381	37.1708	-1.03	1.00
15	39.0998	37.2355	35.4167	-1.00	0.98
16	37.1553	35.4363	33.7555	-0.98	0.96
17	35.3186	33.7344	32.1818	-0.95	0.94
18	33.5833	32.1240	30.6905	-0.93	0.91
19	31.9432	30.5997	29.2769	-0.90	0.89
20	30.3925	29.1565	27.9365	-0.88	0.87
21	28.9259	27.7895	26.6651	-0.85	0.84
22	27.5383	26.4944	25.4589	-0.83	0.82
23	26.2252	25.2670	24.3140	-0.80	0.80
24	24.9822	24.1034	23.2271	-0.78	0.77
25	23.8050	23.0000	22.1950	-0.78	0.77
26	22.7500	21.9499	21.1520	-0.78	0.78
27	21.7477	20.9536	20.1638	-0.82	0.81
28	20.7951	20.0081	19.2272	-0.86	0.85
29	19.8895	19.1104	18.3394	-0.89	0.88
30	19.0285	18.2581	17.4974	-0.93	0.92
31	18.2094	17.4484	16.6988	-0.97	0.95
32	17.4302	16.6792	15.9410	-1.00	0.99
33	16.6885	15.9480	15.2217	-1.04	1.02
34	15.9825	15.2530	14.5389	-1.08	1.06
35	15.3103	14.5920	13.8903	-1.12	1.09
36	14.6700	13.9632	13.2743	-1.16	1.13
37	14.0599	13.3650	12.6889	-1.20	1.16
38	13.4786	12.7957	12.1325	-1.23	1.20
39	12.9244	12.2537	11.6035	-1.27	1.24
40	12.3960	11.7375	11.1004	-1.31	1.27
41	11.8921	11.2459	10.6218	-1.35	1.31
42	11.4113	10.7775	10.1665	-1.39	1.34
43	10.9526	10.3311	9.7330	-1.43	1.38
44	10.5147	9.9056	9.3204	-1.48	1.42
45	10.0967	9.4999	8.9275	-1.52	1.45
46	9.6976	9.1130	8.5532	-1.56	1.49
47	9.3163	8.7439	8.1965	-1.60	1.53
48	8.9521	8.3916	7.8566	-1.64	1.57
49	8.6040	8.0554	7.5327	-1.68	1.60
50	8.2713	7.7345	7.2237	-1.73	1.64
51	7.9531	7.4280	6.9291	-1.77	1.68
52	7.6489	7.1353	6.6480	-1.81	1.72

Все каталоги и инструкции здесь: http://splitoff.ru/tehn-doc.html

53	7.3580	6.8556	6.3797	-1.85	1.76
54	7.0796	6.5884	6.1237	-1.90	1.79
55	6.8131	6.3329	5.8793	-1.94	1.83
56	6.5581	6.0887	5.6459	-1.99	1.87
57	6.3140	5.8552	5.4230	-2.03	1.91
58	6.0802	5.6318	5.2100	-2.07	1.95
59	5.8563	5.4181	5.0065	-2.12	1.99
60	5.6417	5.2136	4.8120	-2.16	2.03
61	5.4361	5.0178	4.6260	-2.21	2.07
62	5.2391	4.8304	4.4481	-2.25	2.11
63	5.0502	4.6510	4.2780	-2.30	2.15
64	4.8691	4.4791	4.1153	-2.35	2.19
65	4.6954	4.3145	3.9596	-2.39	2.23
66	4.5287	4.1567	3.8105	-2.44	2.27
67	4.3689	4.0055	3.6678	-2.49	2.31
68	4.2154	3.8605	3.5312	-2.53	2.35
69	4.0682	3.7216	3.4004	-2.58	2.39
70	3.9268	3.5883	3.2750	-2.63	2.43
71	3.7910	3.4605	3.1549	-2.68	2.48
72	3.6606	3.3378	3.0398	-2.73	2.52
73	3.5353	3.2201	2.9294	-2.77	2.56
74	3.4150	3.1072	2.8237	-2.82	2.60
75	3.2993	2.9987	2.7222	-2.87	2.64
76	3.1881	2.8946	2.6249	-2.92	2.68
77	3.0812	2.7946	2.5316	-2.97	2.73
78	2.9785	2.6986	2.4420	-3.02	2.77
79	2.8796	2.6063	2.3560	-3.07	2.81
80	2.7845	2.5176	2.2735	-3.12	2.86
81	2.6931	2.4324	2.1943	-3.17	2.90
82	2.6050	2.3505	2.1182	-3.22	2.94
83	2.5203	2.2717	2.0451	-3.28	2.99
84	2.4388	2.1960	1.9749	-3.33	3.03
85	2.3602	2.1231	1.9075	-3.38	3.07
86	2.2846	2.0530	1.8426	-3.43	3.12
87	2.2118	1.9856	1.7803	-3.48	3.16
88	2.1416	1.9207	1.7204	-3.54	3.20
89	2.0740	1.8582	1.6628	-3.59	3.25
90	2.0089	1.7981	1.6074	-3.64	3.29
91	1.9461	1.7402	1.5541	-3.70	3.34
92	1.8856	1.6844	1.5028	-3.75	3.38
93	1.8272	1.6307	1.4535	-3.80	3.43
94	1.7709	1.5789	1.4060	-3.86	3.47
95	1.7166	1.5291	1.3603	-3.91	3.52
96	1.6643	1.4810	1.3163	-3.97	3.56
97	1.6138	1.4347	1.2739	-4.02	3.61

Все каталоги и инструкции здесь: http://splitoff.ru/tehn-doc.html

98	1.5650	1.3900	1.2331	-4.08	3.66
99	1.5180	1.3470	1.1937	-4.13	3.70
100	1.4726	1.3054	1.1559	-4.19	3.75
101	1.4287	1.2654	1.1194	-4.24	3.80
102	1.3864	1.2268	1.0842	-4.30	3.84
103	1.3455	1.1895	1.0503	-4.36	3.89
104	1.3060	1.1535	1.0176	-4.42	3.94
105	1.2679	1.1188	0.9860	-4.47	3.98
106	1.2310	1.0853	0.9556	-4.53	4.03
107	1.1954	1.0529	0.9263	-4.59	4.08
108	1.1610	1.0217	0.8980	-4.65	4.13
109	1.1277	0.9915	0.8707	-4.70	4.17
110	1.0955	0.9624	0.8443	-4.76	4.22
111	1.0644	0.9342	0.8189	-4.82	4.27
112	1.0344	0.9070	0.7943	-4.88	4.32
113	1.0053	0.8807	0.7706	-4.94	4.37
114	0.9771	0.8553	0.7478	-5.00	4.41
115	0.9499	0.8307	0.7256	-5.06	4.46
116	0.9235	0.8070	0.7043	-5.12	4.51
117	0.8980	0.7840	0.6837	-5.18	4.56
118	0.8734	0.7618	0.6637	-5.24	4.61
119	0.8495	0.7404	0.6445	-5.30	4.66
120	0.8263	0.7196	0.6258	-5.36	4.71

Все каталоги и инструкции здесь: http://splitoff.ru/tehn-doc.html

Pipe Sensor

R25℃=10KΩ±3%

B25℃/50℃=3700K±3%

Temp.((℃))	Max.(KΩ)	Normal(KΩ)	Min.(KΩ)	Tolerance(℃)	
-30	165.2170	147.9497	132.3678	-1.94	1.75
-29	155.5754	139.5600	125.0806	-1.93	1.74
-28	146.5609	131.7022	118.2434	-1.91	1.73
-27	138.1285	124.3392	111.8256	-1.89	1.71
-26	130.2371	117.4366	105.7989	-1.87	1.70
-25	122.8484	110.9627	100.1367	-1.85	1.69
-24	115.9272	104.8882	94.8149	-1.83	1.67
-23	109.4410	99.1858	89.8106	-1.81	1.66
-22	103.3598	93.8305	85.1031	-1.80	1.64
-21	97.6556	88.7989	80.6728	-1.78	1.63
-20	92.3028	84.0695	76.5017	-1.76	1.62
-19	87.2775	79.6222	72.5729	-1.74	1.60
-18	82.5577	75.4384	68.8710	-1.72	1.59
-17	78.1230	71.5010	65.3815	-1.70	1.57
-16	73.9543	67.7939	62.0907	-1.68	1.55
-15	70.0342	64.3023	58.9863	-1.66	1.54
-14	66.3463	61.0123	56.0565	-1.64	1.52
-13	62.8755	57.9110	53.2905	-1.62	1.51
-12	59.6076	54.9866	50.6781	-1.60	1.49
-11	56.5296	52.2278	48.2099	-1.58	1.47
-10	53.6294	49.6244	45.8771	-1.56	1.46
-9	50.8956	47.1666	43.6714	-1.54	1.44
-8	48.3178	44.8454	41.5851	-1.51	1.42
-7	45.8860	42.6525	39.6112	-1.49	1.40
-6	43.5912	40.5800	37.7429	-1.47	1.39
-5	41.4249	38.6207	35.9739	-1.45	1.37
-4	39.3792	36.7676	34.2983	-1.43	1.35
-3	37.4465	35.0144	32.7108	-1.41	1.33
-2	35.6202	33.3552	31.2062	-1.38	1.31
-1	33.8936	31.7844	29.7796	-1.36	1.29
0	32.2608	30.2968	28.4267	-1.34	1.28
1	30.7162	28.8875	27.1431	-1.32	1.26
2	29.2545	27.5519	25.9250	-1.29	1.24
3	27.8708	26.2858	24.7686	-1.27	1.22
4	26.5605	25.0851	23.6704	-1.25	1.20
5	25.3193	23.9462	22.6273	-1.23	1.18
6	24.1432	22.8656	21.6361	-1.20	1.16
7	23.0284	21.8398	20.6939	-1.18	1.14
8	21.9714	20.8659	19.7982	-1.15	1.12
9	20.9688	19.9409	18.9463	-1.13	1.09
10	20.0176	19.0621	18.1358	-1.11	1.07
11	19.1149	18.2270	17.3646	-1.08	1.05

Все каталоги и инструкции здесь: http://splitoff.ru/tehn-doc.html

12	18.2580	17.4331	16.6305	-1.06	1.03
13	17.4442	16.6782	15.9315	-1.03	1.01
14	16.6711	15.9601	15.2657	-1.01	0.99
15	15.9366	15.2770	14.6315	-0.98	0.96
16	15.2385	14.6268	14.0271	-0.96	0.94
17	14.5748	14.0079	13.4510	-0.93	0.92
18	13.9436	13.4185	12.9017	-0.91	0.90
19	13.3431	12.8572	12.3778	-0.88	0.87
20	12.7718	12.3223	11.8780	-0.86	0.85
21	12.2280	11.8126	11.4011	-0.83	0.83
22	11.7102	11.3267	10.9459	-0.81	0.80
23	11.2172	10.8634	10.5114	-0.78	0.78
24	10.7475	10.4216	10.0964	-0.75	0.75
25	10.3000	10.0000	9.7000	-0.75	0.75
26	9.8975	9.5974	9.2980	-0.76	0.76
27	9.5129	9.2132	8.9148	-0.80	0.80
28	9.1454	8.8465	8.5496	-0.84	0.83
29	8.7942	8.4964	8.2013	-0.87	0.86
30	8.4583	8.1621	7.8691	-0.91	0.90
31	8.1371	7.8428	7.5522	-0.95	0.93
32	7.8299	7.5377	7.2498	-0.98	0.97
33	7.5359	7.2461	6.9611	-1.02	1.00
34	7.2546	6.9673	6.6854	-1.06	1.04
35	6.9852	6.7008	6.4222	-1.10	1.07
36	6.7273	6.4459	6.1707	-1.13	1.11
37	6.4803	6.2021	5.9304	-1.17	1.14
38	6.2437	5.9687	5.7007	-1.21	1.18
39	6.0170	5.7454	5.4812	-1.25	1.22
40	5.7997	5.5316	5.2712	-1.29	1.25
41	5.5914	5.3269	5.0704	-1.33	1.29
42	5.3916	5.1308	4.8783	-1.37	1.33
43	5.2001	4.9430	4.6944	-1.41	1.36
44	5.0163	4.7630	4.5185	-1.45	1.40
45	4.8400	4.5905	4.3500	-1.49	1.44
46	4.6708	4.4252	4.1887	-1.53	1.47
47	4.5083	4.2666	4.0342	-1.57	1.51
48	4.3524	4.1145	3.8862	-1.61	1.55
49	4.2026	3.9686	3.7443	-1.65	1.59
50	4.0588	3.8287	3.6084	-1.70	1.62
51	3.9206	3.6943	3.4780	-1.74	1.66
52	3.7878	3.5654	3.3531	-1.78	1.70
53	3.6601	3.4416	3.2332	-1.82	1.74
54	3.5374	3.3227	3.1183	-1.87	1.78
55	3.4195	3.2085	3.0079	-1.91	1.82
56	3.3060	3.0989	2.9021	-1.95	1.85
57	3.1969	2.9935	2.8005	-2.00	1.89

Все каталоги и инструкции здесь: http://splitoff.ru/tehn-doc.html

58	3.0919	2.8922	2.7029	-2.04	1.93
59	2.9909	2.7948	2.6092	-2.08	1.97
60	2.8936	2.7012	2.5193	-2.13	2.01
61	2.8000	2.6112	2.4328	-2.17	2.05
62	2.7099	2.5246	2.3498	-2.22	2.09
63	2.6232	2.4413	2.2700	-2.26	2.13
64	2.5396	2.3611	2.1932	-2.31	2.17
65	2.4591	2.2840	2.1195	-2.36	2.21
66	2.3815	2.2098	2.0486	-2.40	2.25
67	2.3068	2.1383	1.9803	-2.45	2.29
68	2.2347	2.0695	1.9147	-2.49	2.34
69	2.1652	2.0032	1.8516	-2.54	2.38
70	2.0983	1.9393	1.7908	-2.59	2.42
71	2.0337	1.8778	1.7324	-2.63	2.46
72	1.9714	1.8186	1.6761	-2.68	2.50
73	1.9113	1.7614	1.6219	-2.73	2.54
74	1.8533	1.7064	1.5697	-2.78	2.58
75	1.7974	1.6533	1.5194	-2.83	2.63
76	1.7434	1.6021	1.4710	-2.88	2.67
77	1.6913	1.5528	1.4243	-2.92	2.71
78	1.6409	1.5051	1.3794	-2.97	2.75
79	1.5923	1.4592	1.3360	-3.02	2.80
80	1.5454	1.4149	1.2942	-3.07	2.84
81	1.5000	1.3721	1.2540	-3.12	2.88
82	1.4562	1.3308	1.2151	-3.17	2.93
83	1.4139	1.2910	1.1776	-3.22	2.97
84	1.3730	1.2525	1.1415	-3.27	3.01
85	1.3335	1.2153	1.1066	-3.32	3.06
86	1.2953	1.1794	1.0730	-3.38	3.10
87	1.2583	1.1448	1.0405	-3.43	3.15
88	1.2226	1.1113	1.0092	-3.48	3.19
89	1.1880	1.0789	0.9789	-3.53	3.24
90	1.1546	1.0476	0.9497	-3.58	3.28
91	1.1223	1.0174	0.9215	-3.64	3.33
92	1.0910	0.9882	0.8942	-3.69	3.37
93	1.0607	0.9599	0.8679	-3.74	3.42
94	1.0314	0.9326	0.8424	-3.80	3.46
95	1.0030	0.9061	0.8179	-3.85	3.51
96	0.9756	0.8806	0.7941	-3.90	3.55
97	0.9490	0.8558	0.7711	-3.96	3.60
98	0.9232	0.8319	0.7489	-4.01	3.64
99	0.8983	0.8088	0.7275	-4.07	3.69
100	0.8741	0.7863	0.7067	-4.12	3.74
101	0.8507	0.7646	0.6867	-4.18	3.78
102	0.8281	0.7436	0.6672	-4.23	3.83
103	0.8061	0.7233	0.6484	-4.29	3.88

Все каталоги и инструкции здесь: http://splitoff.ru/tehn-doc.html

104	0.7848	0.7036	0.6303	-4.34	3.92
105	0.7641	0.6845	0.6127	-4.40	3.97
106	0.7441	0.6661	0.5957	-4.46	4.02
107	0.7247	0.6482	0.5792	-4.51	4.07
108	0.7059	0.6308	0.5632	-4.57	4.12
109	0.6877	0.6140	0.5478	-4.63	4.16
110	0.6700	0.5977	0.5328	-4.69	4.21
111	0.6528	0.5820	0.5183	-4.74	4.26
112	0.6361	0.5667	0.5043	-4.80	4.31
113	0.6200	0.5518	0.4907	-4.86	4.36
114	0.6043	0.5374	0.4775	-4.92	4.41
115	0.5891	0.5235	0.4648	-4.98	4.45
116	0.5743	0.5100	0.4524	-5.04	4.50
117	0.5600	0.4968	0.4404	-5.10	4.55
118	0.5460	0.4841	0.4288	-5.16	4.60
119	0.5325	0.4717	0.4175	-5.22	4.65
120	0.5194	0.4597	0.4066	-5.28	4.70

Все каталоги и инструкции здесь: http://splitoff.ru/tehn-doc.html

6. System Configuration

6.1 System Configuration

After the installation and test operation of the room air conditioner have been completed, it should be operated and handled as described below. Every user would like to know the correct method of operation of the room air conditioner, to check if it is capable of cooling (or heating) well, and to know a clever method of using it.In order to meet this expectation of the users, giving sufficient explanations taking enough time can be said to reduce about 80% of the requests for servicing. However good the installation work is and however good the functions are, the customer may blame either the room air conditioner or its installation work because of improper handling. The installation work and handing over of the unit can only be considered to have been completed when its handling has been explained to the user without using technical terms but giving full knowledge of the equipment.

Все каталоги и инструкции здесь: http://splitoff.ru/tehn-doc.html

6.2 Instruction

Cautions

The machine is adaptive in following situation

I. Applicable ambient temperature range:

Cooling	Indoor	Maximum: D.B / W.B Minimum: D.B / W.B	32°C/23°C 18°C/14°C
	Outdoor	Maximum: D.B Minimum: D.B	43°C/26°C 18°C
Heating	Indoor	Maximum: D.B Minimum: D.B	27°C 15°C
	Outdoor	Maximum: D.B / W.B Minimum: D.B / W.B	24°C/18°C -7°C/-8°C

2. If the supply cord is damaged, it must be replaced by the manufacturer or its service agent or a similar qualified person. The type of connecting wire is H05RN-F or H07RN-F
3. If the fuse on PC board is broken please change it with the type of T. 3.15A/250V.
4. The distance between the indoor unit and the floor should be more than 2m.
5. The wiring method should be in line with the local wiring standard.
6. After installation, the power plug should be easily reached.
7. The waste battery should be disposed properly.
8. The appliance is not intended to use by young children or infirm persons without supervision.
9. Young children should be supervised ensure that they do not play with the appliance.
10. The appliance must be installed on strong enough supporter.
11. The wiring diagram is attached inside the machine.

Все каталоги и инструкции здесь: http://splitoff.ru/tehn-doc.html

Parts and Functions

Indoor Unit

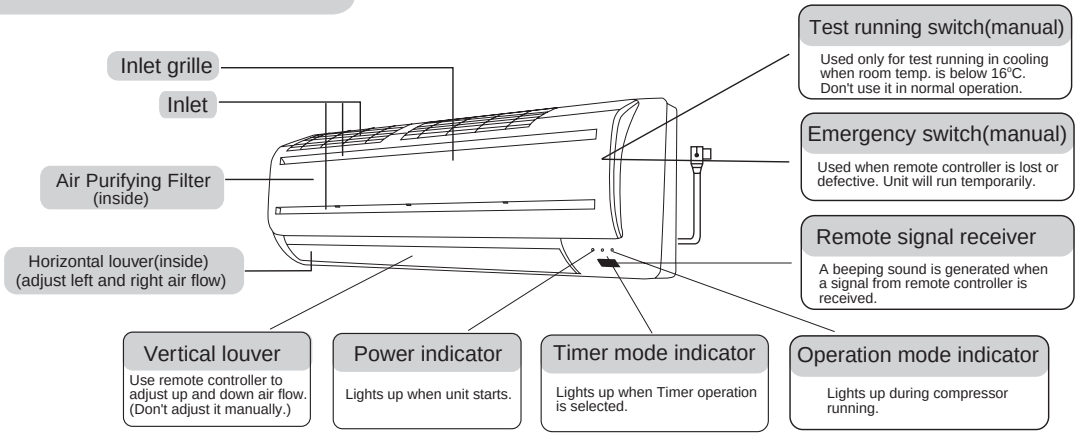

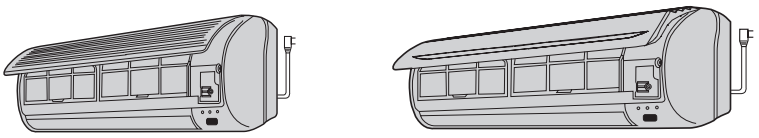

Actual inlet grille may vary from the one shown in the manual according to the product purchased

Outdoor Unit

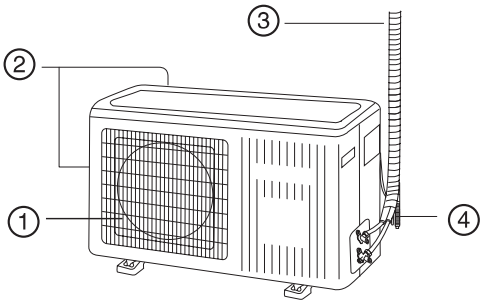

HSU-05C03 HSU-07C03

① OUTLET
② INLET
③ CONNECTING PIPING AND ELECTRICAL WIRING
④ DRAIN HOSE

Все каталоги и инструкции здесь: http://splitoff.ru/tehn-doc.html

Operation

Buttons and display of the remote controller.

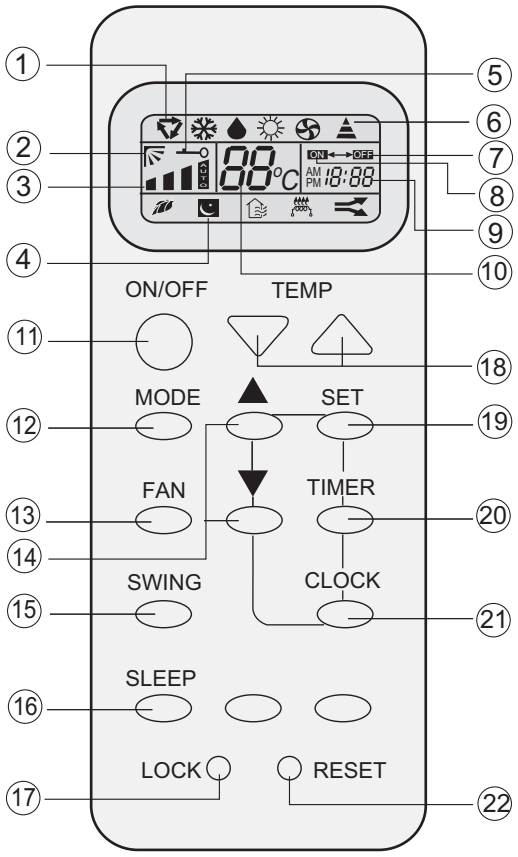

1. Mode display
   AUTO
   COOL
   DRY
   HEAT
   FAN
2. SWING display
3. FAN SPEED display

4. SLEEP display
5. LOCK display
6. SIGNAL SENDING
7. TIMER OFF display
8. TIMER ON display
9. CLOCK display
10. TEMP display
11. POWER ON/OFF
    Used for unit start and stop.
12. MODE
    Used to select AUTO run, COOL, DRY, HEAT and FAN operation
13. FAN
    Used to select fan speed LO, MED, HI, AUTO
14. HOUR
    Used to set clock and timer setting.
15. SWING
    Used to set auto fan direction.
16. SLEEP
    Used to select sleep mode.
17. LOCK
    Used to lock buttons and LCD display.
18. TEMP.
    Used to select your desired temp.
19. SET
    Used to confirm timer and clock settings.
20. TIMER
    Used to select TIMER ON, TIMER OFF, TIMER ON-OFF
21. CLOCK
    Used to set correct time
22. RESET
    Used to reset the controller back to normal condition.

Clock set

When unit is started for the first time and after replacing batteries in remote controller, clock should be adjusted as follows:
Press CLOCK button, "AM" or "PM" flashes.
Press △ or ▽ to set correct time. Each press will increase or decrease 1min. If the button is kept depressed, time will change quickly.
After time setting is confirmed, press SET, "AM "and "PM" stop flashing, while clock starts working.

NOTE: Cooling only unit do not have displays and functions related with heating

Hints

After replacing with new batteries, remote controller will conduct self-check, displaying all information on LCD. Then, it will become normal.

Все каталоги и инструкции здесь: http://splitoff.ru/tehn-doc.html

Parts and Functions

Operation

Buttons and display of the remote controller.

If the unit which you purchased has healthy function, Remote controller should like the following figure:

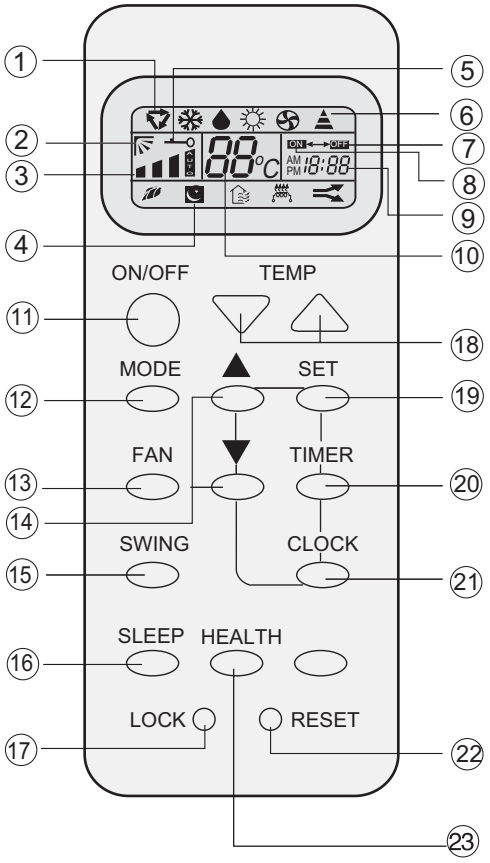

1. Mode display
   AUTO
   COOL
   DRY
   HEAT
   FAN
2. SWING display
3. FAN SPEED display

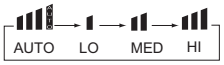

4. SLEEP display
5. LOCK display
6. SIGNAL SENDING
7. TIMER OFF display
8. TIMER ON display
9. CLOCK display
10. TEMP display
11. POWER ON/OFF
    Used for unit start and stop.
12. MODE
    Used to select AUTO run, COOL, DRY, HEAT and FAN operation
13. FAN
    Used to select fan speed LO, MED, HI, AUTO
14. HOUR
    Used to set clock and timer setting.
15. SWING
    Used to set auto fan direction.
16. SLEEP
    Used to select sleep mode.
17. LOCK
    Used to lock buttons and LCD display.
18. TEMP.
    Used to select your desired temp.
19. SET
    Used to confirm timer and clock settings.
20. TIMER
    Used to select TIMER ON, TIMER OFF, TIMER ON-OFF
21. CLOCK
    Used to set correct time
22. RESET
    Used to reset the controller back to normal condition.
23. HEALTH
    Used to set healthy operation

BRIEF INTRODUCTION TO HEALTH OPERATION

The anion generator in the air conditioner can generate a lot of anion to effectively balance the quantity of position and anion in the air and also to kill bacteria and speed up the dust sediment in the room and finally clean the air in the room.

NOTE: Cooling only unit do not have displays and functions related with heating

Hints

After replacing with new batteries, remote controller will conduct self-check, displaying all information on LCD. Then, it will become normal.

Все каталоги и инструкции здесь: http://splitoff.ru/tehn-doc.html

Operation

Remote controller's operation

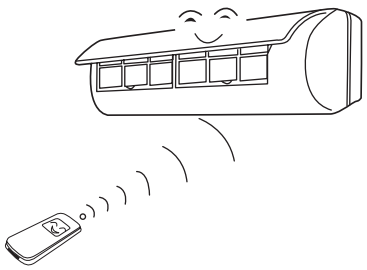

- When in use, put the signal transmission head directly to the receiver hole on the indoor unit.
- The distance between the signal transmission head and the receiver hole should be within 7m without any obstacle as well.
- Don't throw the controller, prevent it from being damaged.
- When electronic-started type fluorescent lamp or change-over type fluorescent lamp or wireless telephone is installed in the room, the receiver is apt to be disturbed in receivering the signals so the distance to the indoor unit should be shorter.

Loading of the battery

Load the batteries as illustrated. 2 R-03 batteries, resetting key (cylinder)

Remove the battery cover:

Slightly press " ▼ " and push down the cover.

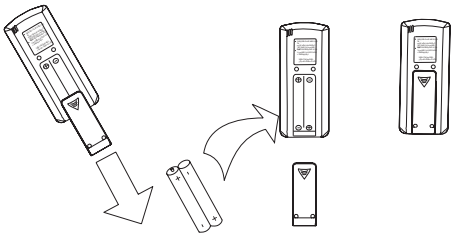

Load the battery:

Be sure that the loading is in line with the" + "/"-" pole request as illustrated.

Put on the cover again

Confirmation indicator:

In disorderation, reload the batteries or load the new batteries after 6mins.

Note:

Use two new same-typed batteries when loading.
If the remote controller can't run normally or doesn't work at all, use a sharp pointed item to press the reset key.

Hint:

Remove the batteries in case unit won't be in usage for a long period.
If there are any display after taking-out just need to press reset key.

Power failure resume(please set and apply as necessary)

If sudden power failure occurs, the unit will resume original operation when power is supplied again.

Note: When sudden power failure happens during unit operation in power failure resume mode, if the air conditioner is not desired for use in a long period, please shut off the power supply in case that the unit automatically resume operation when power is re-supplied, or press ON/OFF to turn off the unit when power resumes.

Все каталоги и инструкции здесь: http://splitoff.ru/tehn-doc.html

Operation

Auto run, Fan operation

Enjoy yourself by just a gentle press.

(1) Unit start

Press ON/OFF button, unit starts.
Previous operation status appears on display.
(Not Timer setting)
Power indicator on indoor unit lights up.

(2) Select operation mode

Press MODE button. For each press, operation mode changes as follows:

Unit will run in selected mode.
Stop display at " " AUTO or " "FAN.

(3) FAN

Press FAN button. For each press, fan speed changes as follows:

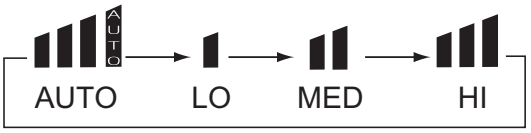

Unit will run at selected fan speed.
Note:AUTO is not available in FAN mode.

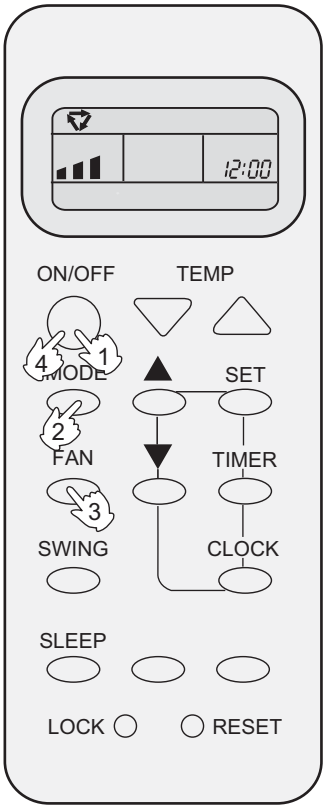

(4) Unit stop

Press ON/OFF button.
Only time remains on LCD.
All indicators on indoor unit go out.
Vertical flap closed automatically.

Hints

Remote controller can memorize settings in each operation mode. To run it next time just select the operation mode and it will start with the previous setting.
No reelecting is needed.(TIMER ON/OFF needs reelecting)

Cautions:
On cooling only unit, heating mode is not available,
After replacing batteries, press ON/OFF, and display becomes as follows:
Operation mode: AUTO, Temp. No
Timer mode: No, Fan speed :AUTO

Note:
The above information is the explanation of the displayed information therefore varies with those displayed in actual operation.

Все каталоги и инструкции здесь: http://splitoff.ru/tehn-doc.html

Operation

COOL,HEAT and DRY operation

Recommendations: • Use COOL in summer. • Use HEAT in winter
• Use DRY in spring, autumn and in damp climate.

(1) Unit start

Press ON/OFF button, unit starts.
Previous operation status appears on display. (Not Timer setting)
Power indicator on indoor unit lights up.

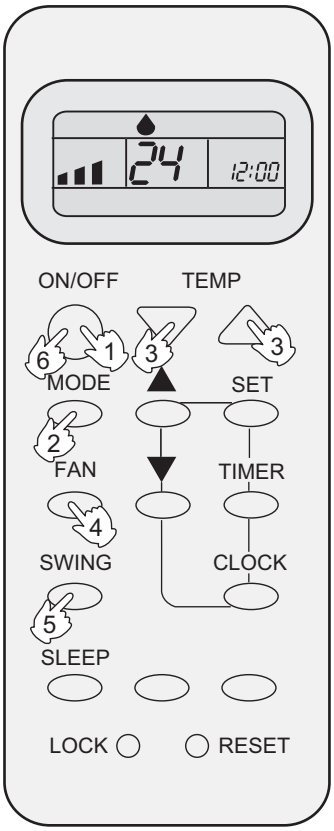

(2) Select operation mode

Press MODE button. For each press, operation mode changes as follows:

Unit will run in operation mode displayed on LCD.
Stop display at your desired mode.

(3) Select temp. setting

Press TEMP button.
△ Every time the button is pressed, temp. setting increases 1°C
▽ Every time the button is pressed, temp. setting decreases 1°C
Unit will start running to reach the temp. setting on LCD.

(4) Fan speed selection

Press FAN button. For each press, fan speed changes as follows:

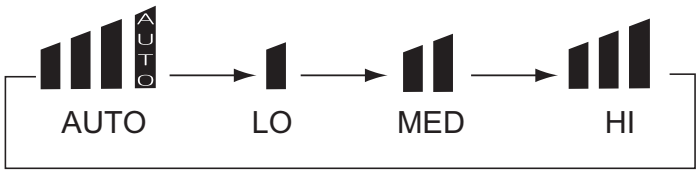

Unit runs at the speed displayed on LCD.
In DRY mode, when room temp. becomes 2°C higher than temp. setting, unit will run intermittently at LO speed regardless of FAN setting.

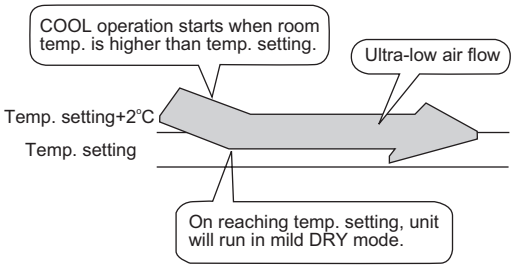

Hints

On cooling only unit, heating mode is not available.
Remote controller can memorize each operation status. When starting it next time, just press ON/OFF button and unit will run in previous status.

Все каталоги и инструкции здесь: http://splitoff.ru/tehn-doc.html

Operation

(5) Air flow direction adjustment

After operation mode is selected, vertical flap will open automatically according to the mode. Referring to the Fig.

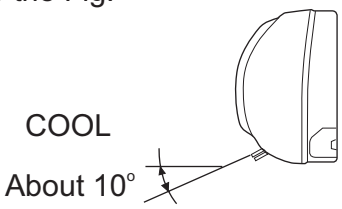

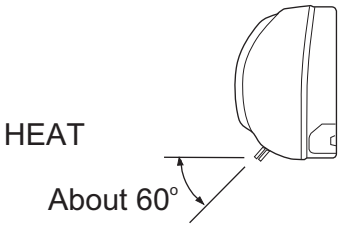

Up and down (Use remote controller)

Press SWING button, vertical flap will move within the range shown in the Fig. Press SWING button stop it at a fixed position.

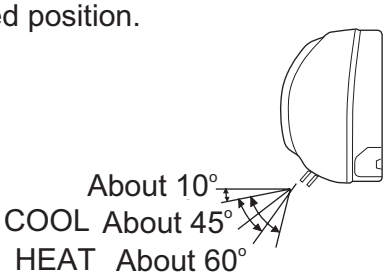

Left and right air flow adjustment (manual)

Move the horizontal blade by a knob on air conditioner to adjust left and right direction referring to Fig.

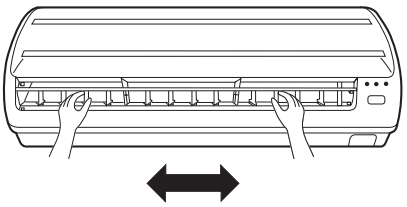

Cautions:

It is advisable not to keep vertical flap at downward position for a long time in COOL or DRY mode, otherwise, condensate water might occur.

Cautions:

When humidity is high, condensate water might occur at air outlet if all horizontal louvers are adjusted to left or right.

(6) Unit stop

Press ON/OFF button.
Only time remains on LCD.
Vertical flap closes automatically.

Cautions:

Unit won't restart until 3 minutes have elapsed, due to system protection.
HEAT mode is not available on cooling only unit.

Hints

As cold air flows downward in COOL mode, adjusting air flow horizontally will be much more helpful for a better air circulation.
As warm air flows upward in HEAT mode, adjusting air flow downward will be much more helpful for a better air circulation.
Be careful not to catch a cold when cold air blows downward.
It is harmful to your health in summer to go frequently in and out of places where temp. difference is above 7°C. Temp. difference of 3-5°C will remove your fatigue.
More than this, unit's load can be reduced and power consumption cut down as well. So, you'd better set a temp. difference of 3-5°C between indoor and outdoor temp. in COOL mode.

Все каталоги и инструкции здесь: http://splitoff.ru/tehn-doc.html

Operation

TIMER Operation

Set Clock correctly before starting Timer operation
You can let unit start or stop automatically at following times: Before you wake up in the morning, or get back from outside or after you fall asleep at night.

TIMER ON/OFF

(1)After unit start, select your desired operation mode.
Operation mode will be displayed on LCD.
Power indicator on indoor unit lights up.

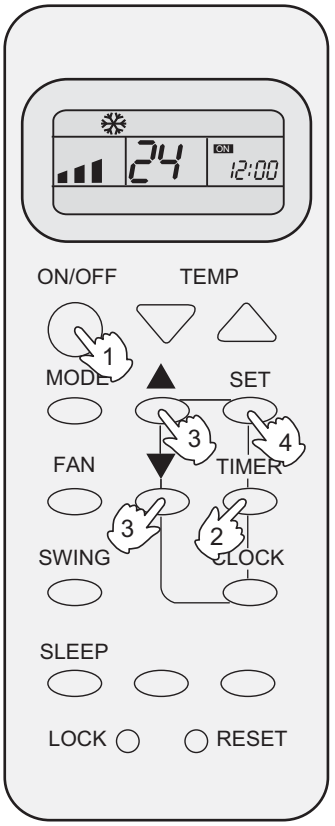

(2)TIMER mode selection

Press TIMER button to change TIMER mode.
Every time the button is pressed, display changes as follows:

ON → OFF → ON ⏲ OFF → blank
TIMER ON TIMER OFF TIMER ON-OFF

Select your desired TIMER mode (TIMER ON or TIMER OFF) ON or OFF will flash.

(3)Timer setting

Press HOUR△ / ▽ button.
△ Every time the button is pressed, time increases 10 min. If button is kept depressed, time will change quickly.
▽ Every time the button is pressed, time decreases 10 min. If button is kept depressed, time will change quickly. Time will be shown on LCD. It can be adjusted within 24 hours.

(4)Confirming your setting

After setting correct time, press SET button to confirm, "ON" or "OFF" stops flashing
Time displayed: Unit starts or stops at x hour x min. (TIMER ON or TIMER OFF).
Timer mode indicator on indoor unit lights up.

To cancel TIMER mode

Just press TIMER button several times until TIMER mode disappears.

Hints

After replacing batteries or a power failure happens, Time setting should be reset.
Remote controller possesses memory function, when use TIMER mode next time, just press SET button after mode selecting if timer setting is the same as previous one.

Все каталоги и инструкции здесь: http://splitoff.ru/tehn-doc.html

Operation

TIMER ON-OFF

(1)After unit start, select your desired operation mode
Operation mode will be displayed on LCD.
Power indicator on indoor unit lights up.

(2) Press TIMER button to change TIMER mode.

Every time the button is pressed, display changes as follows:

Select TIMER ON-OFF. "ON" will flash.

(3)Time setting for TIMER ON

Press HOUR button.

△ Every time the button is pressed, time increases 10 min.
If button is kept depressed, time will change quickly.
▽ Every time the button is pressed, time decreases 10 min.
If button is kept depressed, time will change quickly.

Time will be shown on LCD.
It can be adjusted within 24 hours.
AM refers to morning and PM to afternoon

(4) Time confirming for TIMER ON

After time setting, press TIMER button to confirm.
"ON" stops blinking, While "OFF" starts blinking.
Time displayed: Unit starts at x hour x min.

(5)Time setting for TIMER OFF

Follow the same procedures in "Time setting for TIMER ON".

(6) Time confirming for TIMER OFF

After time setting, press SET button to confirm, "OFF" stops flashing
Time displayed: Unit stops at X hour X min.

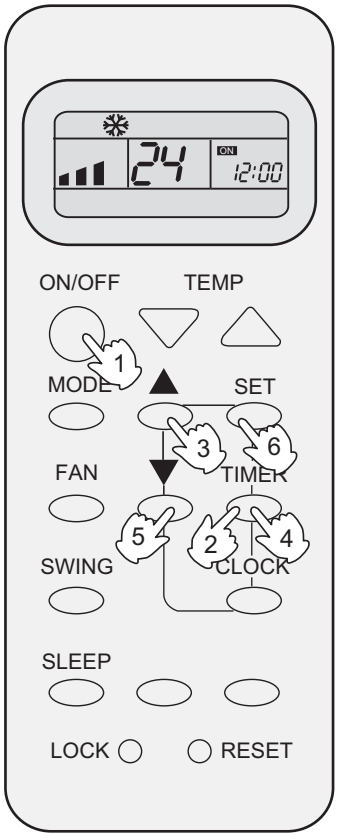

To cancel TIMER mode

■ Just press TIMER button several times until TIMER mode disappears.

Все каталоги и инструкции здесь: http://splitoff.ru/tehn-doc.html

Operation

Emergency operation and test operation

Emergency Operation:

- Carry out this operation only when the remote controller is defective or lost.
- When the emergency operation switch is pressed, a" Pi "sound starts once, which means the start of this operation.
- In this operation, it is not possible to change the settings of temperature and air flow speed, it is also impossible to do an operation by the timer.
- Follow the requirements below.

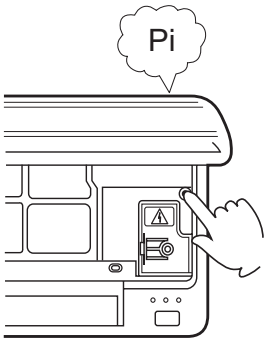

Room temperature	Designated temperature	Timer mode	Air flow speed	Operation mode
More than 23°C	26°C	CONTINUOUS	AUTO	COOL
Less than 23°C	23°C	CONTINUOUS	AUTO	HEAT

If an air conditioner is a model for both cooling and heating.
Cooling when the room temperature at the start of operation is above 23°C.
Heating when the room temperature at the start of operation is below 23°C

Test operation:

- Use this switch in the test operation when the room temperature is less 16°C, do not use it in the normal operation.
  Continue to press the test operation switch for more than 5 seconds. After you hear the "Pi" sound twice, release your finger from the switch, the cooling operation starts with the air flow speed setting "Hi".

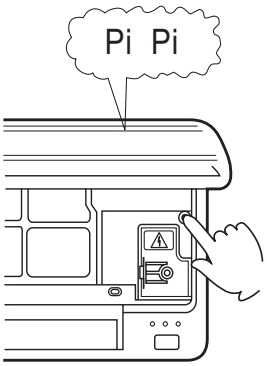

Removal of the restriction of emergency or test operation:

- Press once more the emergency operation switch, or manipulate through the remote controller, a "Pi" sound causes the restriction of emergency or test operation to be removed.
- When the remote controller is manipulated for the removal, then the selected operation by the remote controller.

Все каталоги и инструкции здесь: http://splitoff.ru/tehn-doc.html

Operation

Comfortable SLEEP

Before going to bed at night, you can simply press the SLEEP button and unit will bring you a sound sleep in selected mode.

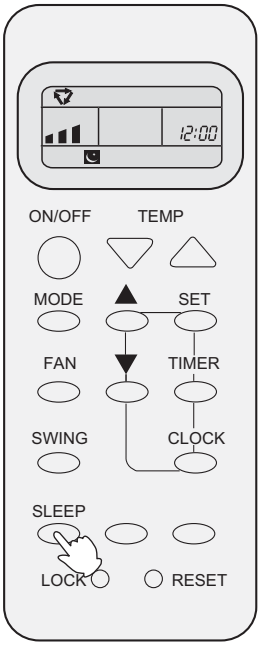

In COOL mode

One hour after SLEEP mode starts, temp. will become 1°C higher than temp. setting. After running for another 1 hour, temp. rises by 1°C further. Unit will run for 6 hours then stops automatically. Temp. is higher than temp. setting so that room temp. won't be too low for your sleep.(As shown in Fig.l)

In HEAT mode

One hour after SLEEP mode starts, temp. will become 2°C lower than temp. setting. After running for another 1 hour, temp. decreases by 2°C further. Unit will run for 3 hours at this temp. then increases another 1°C and stops automatically 3 hours later. Temp. is lower than temp. setting so that room temp. won't be too high for your sleep.
(As shown in Fig .2)

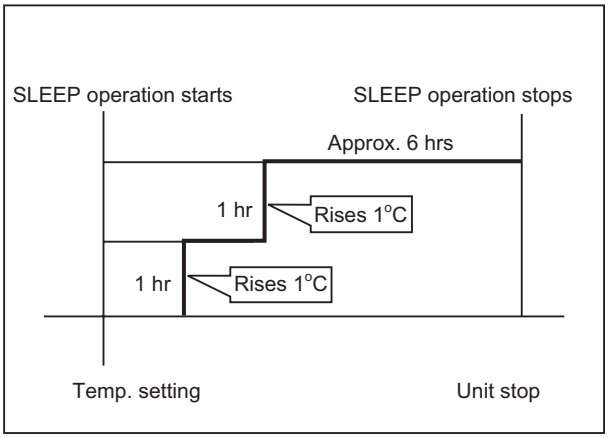

Fig.1

Power Failure Resume Function

If the unit is started for the first time, the compressor will not start running unless 3 minutes have elapsed. When the power resumes after power failure, the unit will run automatically, the power indicator lights up, and 3 minutes later the compressor starts running with the indicator lighting up.

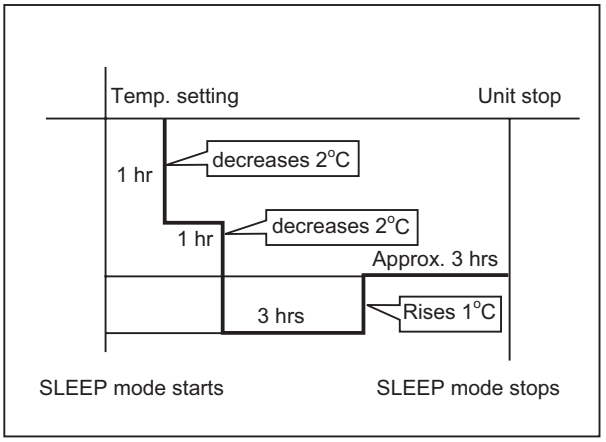

Fig.2

Note:
In AUTO mode, unit will run in SLEEP function according to operation mode.
In FAN mode, comfortable sleep is not available.

Все каталоги и инструкции здесь: http://splitoff.ru/tehn-doc.html

Maintenance

Different models have different appearance

Cleaning of unit casing

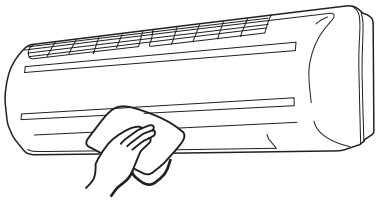

Cut off power supply
before cleaning unit casing with soft cloth.
In case of heavy stain, clean it with neutral detergent.
squeeze water in the cloth, wipe off the detergent on unit casing completely.

Cleaning of remote controller

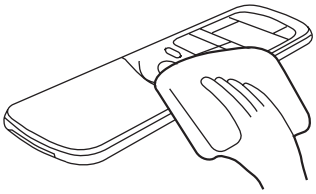

Don't use water to wash unit casing, please use dry cloth.
Don't use glass cleaner or cloth soaked with chemicals.

Cleaning of air filter

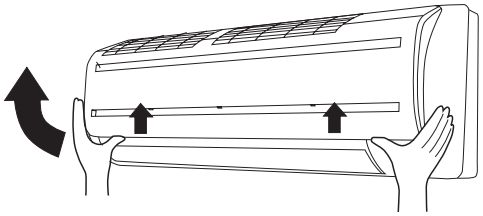

1.Open inlet grille by pulling it upward.

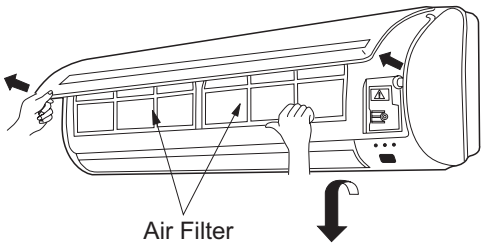

2.Remove air filter
Push up the filter's center tab slightly until it is caesura of the stopper. Remove it by pulling down.

3.Clean the filter
Use a vacuum cleaner to remove dust,or wash the filter with water.
After washing, dry the filter completely in the shade.

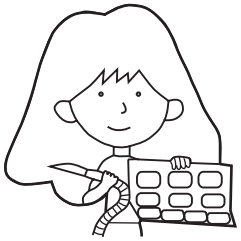

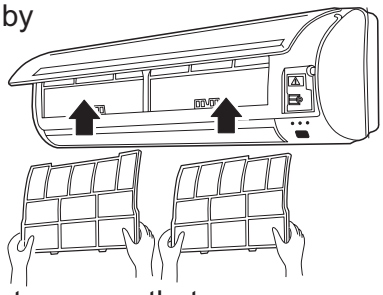

4.Attach the filter
Attach filter behind the stopper so that the "Front" indication is facing to the front. Make sure that it is completely behind the stopper, otherwise problems might occur.

5.Close the inlet grille.

Все каталоги и инструкции здесь: http://splitoff.ru/tehn-doc.html

Maintenance

Better use of air conditioner

Proper room temperature.

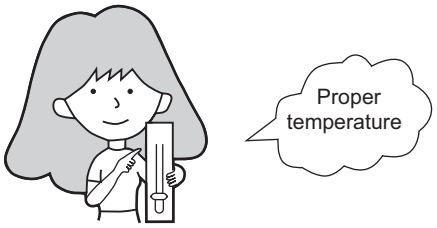

Cleaning of the air filter.

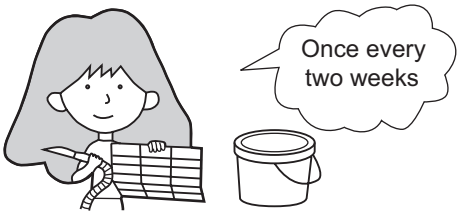

Closing of doors and windows during operation

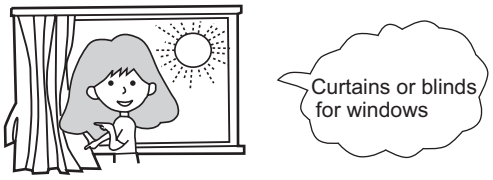

Effective use of the timer.

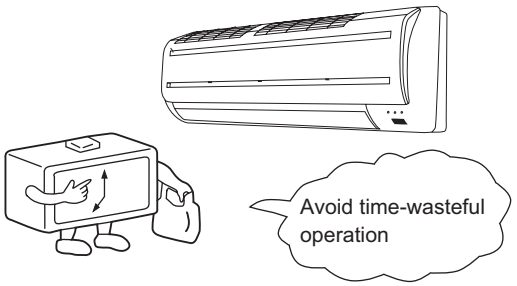

Never fail to observe the followings

Do not sprinkle water over the unit.

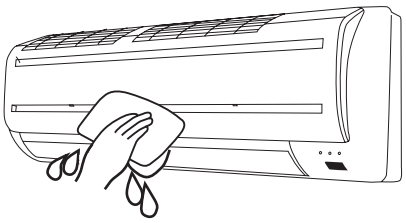

Do not block the inlet or outlet.

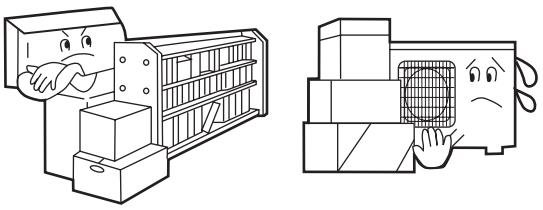

Do not pull power plug.

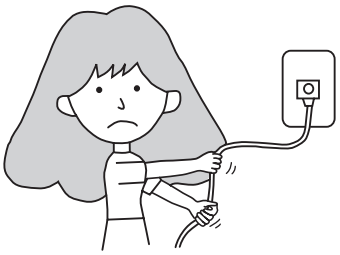

Do not use for other purposes.

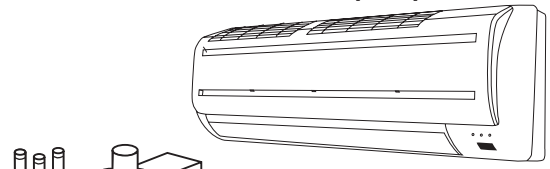

Such as food preservation plant cultivation or animal breeding.

Все каталоги и инструкции здесь: http://splitoff.ru/tehn-doc.html

Trouble shooting

Before asking for service, check the following first.

	Phenomenon	Cause or check points
Normal Performance inspection	The system does not restart immediately.	• When unit is stopped, it won't restart immediately until 3 minutes have elapsed to protect the system. • When the electric plug is pulled out and reinserted, the protection circuit will work for 3 minutes to protect the air conditioner.
	Noise is heard	• During unit operation or at stop, a swishing or gurgling noise may be heard. At first 2-3 minutes after unit start, this noise is more noticeable. (This noise is generated by refrigerant flowing in the system.) • During unit operation, a cracking noise may be heard. This noise is generated by the casing expanding or shrinking because of temperature changes • Should there be a big noise from air flow in unit operation, air filter may be too dirty.
	Smells are generated.	• This is because the system circulates smells from the interior air such as the smell of furniture, cigarettes.
	Mist or steam are blown out.	• During COOL or DRY operation, indoor unit may blow out mist. This is due to the sudden cooling of indoor air.
Multiple check	Does not work at all.	• Is power plug inserted? • Is there a power failure? • Is fuse blown out?
	Poor cooling	• Is the air filter dirty? Normally it should be cleaned every 15 days. • Are there any obstacles before inlet and outlet? • Is temperature set correctly? • Are there some doors or windows left open? • Is there any direct sunlight through the window during the cooling operation?(Use curtain) • Are there too much heat sources or too many people in the room during cooling operation?

Application temp. range of air conditioner -7°C~43°C.

Все каталоги и инструкции здесь: http://splitoff.ru/tehn-doc.html

7. Error Codes and Description

7-1.Problem Symptoms and Measures

	Code indication Power operate timer	Description	
Indoor Malfunction	★ ■ ■	Room temperature sensor failure	
	★ □ □	Heat-exchange sensor failure	
	★ □ ★	Indoor EEPROM error	
	★ ■ ★ ★ ■ ★ ★ ★ ★ repeate the cycle.	Indoor fan motor malfunction	
explaination	□on★flash■off		

7.2 Trouble Shooting

Indoor Malfunction

Thermistor or Related Abnormality (indoor unit)

Indoor Display	★ ■ ■ ★ □ □
Method of Malfunction Detection	the temperatures detected by the thermistors are used to determine thermistor errors
Malfunction Decision Conditions	when the thermistor input is more than 4.92V or less than 0.08V during compressor operation. * Note: The values vary slightly in some models
Supposed Causes	■ Faulty connector connection ■ Faulty thermistor ■ Faulty PCB

Troubleshooting * Caution Be sure to turn off power switch before connect or disconnect connector, or parts damage may be occurred.

★ ■ ■: Room temperature sensor failure CN6

★ □ □: Heat-exchange sensor failure CN6

Все каталоги и инструкции здесь: http://splitoff.ru/tehn-doc.html

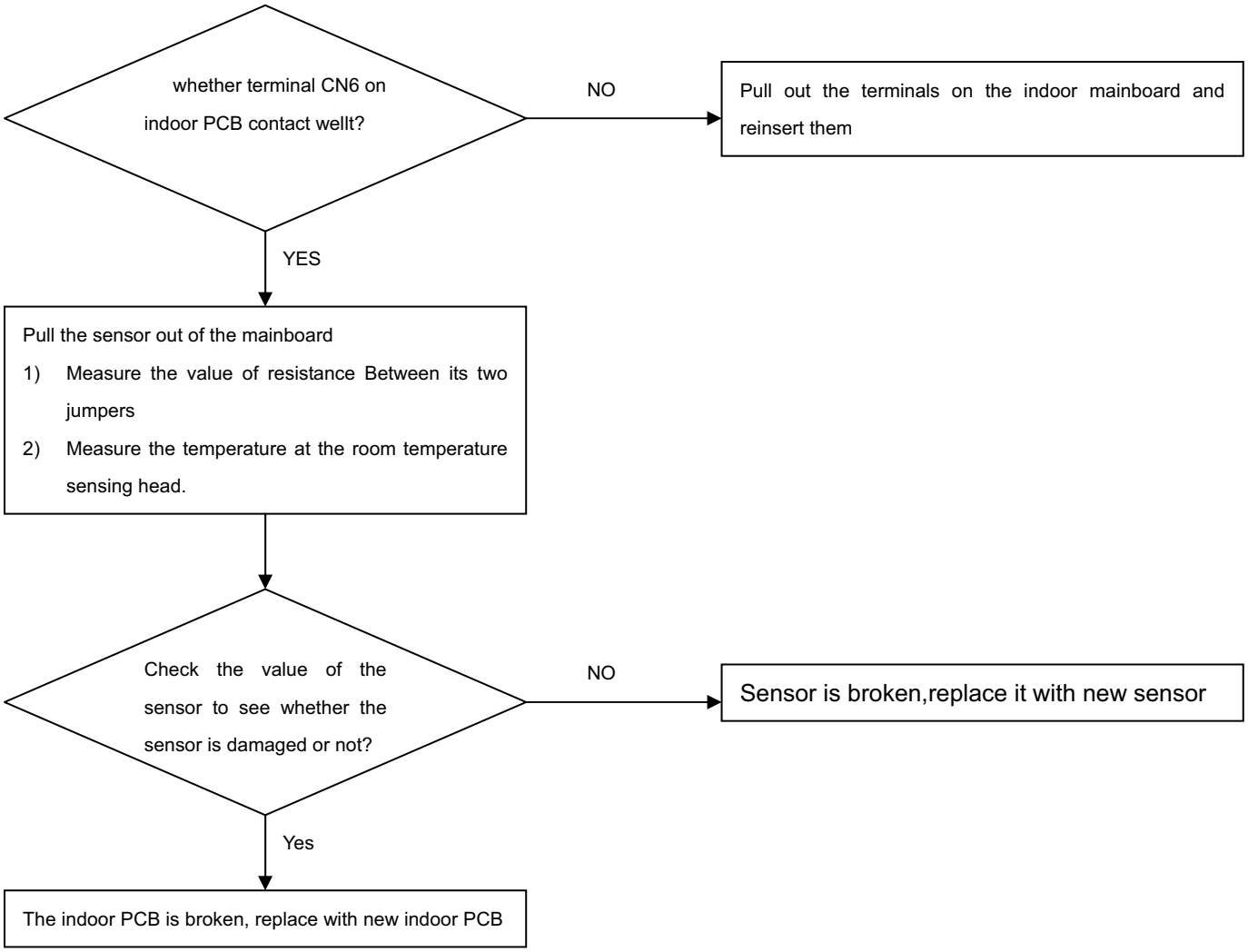

Fan Motor or Related Abnormality

Indoor Display	★	■	★
	★	■	★
	★	★	★

Method of Malfunction Detection	The rotation speed detected by the Hall IC during fan motor operation is used to determine abnormal fan motor operation
Malfunction Decision Conditions	when the detected rotation feedback singal don't receiced in 2 minutes
Supposed Causes	■ Operation halt due to breaking of wire inside the fan motor . ■ Operation halt due to breaking of the fan motor lead wires ■ Dedection error due to faulty indoor unit PCB

repeate the cycle. : Indoor fan motor malfunction

Все каталоги и инструкции здесь: http://splitoff.ru/tehn-doc.html

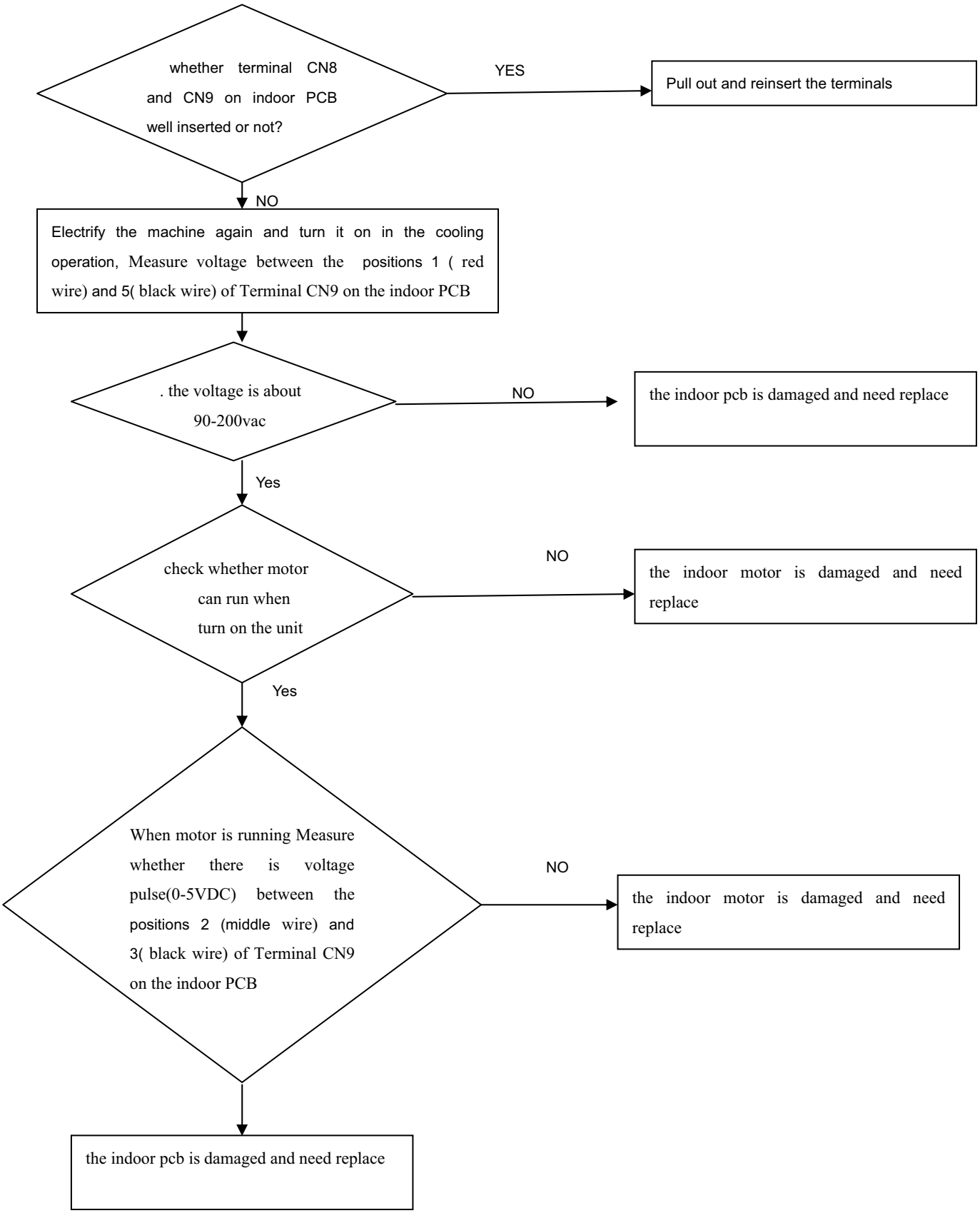

Все каталоги и инструкции здесь: http://splitoff.ru/tehn-doc.html

The EEPROM Abnormality (indoor unit)

Indoor Display	★ □ ★
Method of Malfunction Detection	the Data detected by the EEPROM are used to determine MCU
Malfunction Decision Conditions	when the Data of EEPROM is error or the EEPROM is damaged
Supposed Causes	■ Faulty EEPROM data ■ Faulty EEPROM ■ Faulty PCB
Troubleshooting	* Caution Be sure to turn off power switch before connect or disconnect connector, or parts damage may be occurred.

Resolvent : **Replace the PCB of indoor unit**

★ □ ★: Indoor EEPROM error: Replace the PCB of indoor unit

Все каталоги и инструкции здесь: http://splitoff.ru/tehn-doc.html

8 Installation

- Read this manual before installation
- Explain sufficiently the operating means to the user according to this manual.

Necessary Tools for Installation

1.Driver
2.Hacksaw
3.Hole core drill
4.Spanner(17,19 and 26mm)
5.Torque wrench(17mm,22mm,26mm)
6.Pipe cutter
7.Flaring tool
8.Knife
9.Nipper
10.Gas leakage detector or soap-and-water solution
11.Measuring tape
12.Reamer

Accessory parts

No.	Accessory parts	Number of articles
①	Remote controller	1
②	R-03 dry battery	2
③	Mounting plate	1
○	Drain hose	1
⑤	ϕ 4X50 Steel nail, cement	6
○	ϕ 4X25 Screw / Plastic cap	4
⑦	Drain-elbow	1
○	Cover	1
○	Cushion	4
①	Pipe supporting plate	1

NOTE:
On cool only unit,drain-elbow is not available.

Optional parts for piping

Mark	Parts name
○	Non-adhesive tape
○	Adhesive tape
Ⓒ	Saddle(L.S) with screws
○	Connecting electric cable for indoor and outdoor
Ⓔ	Drain hose
Ⓕ	Heating insulating material
Ⓖ	Piping hole cover

Drawing for the installation of indoor and outdoor units

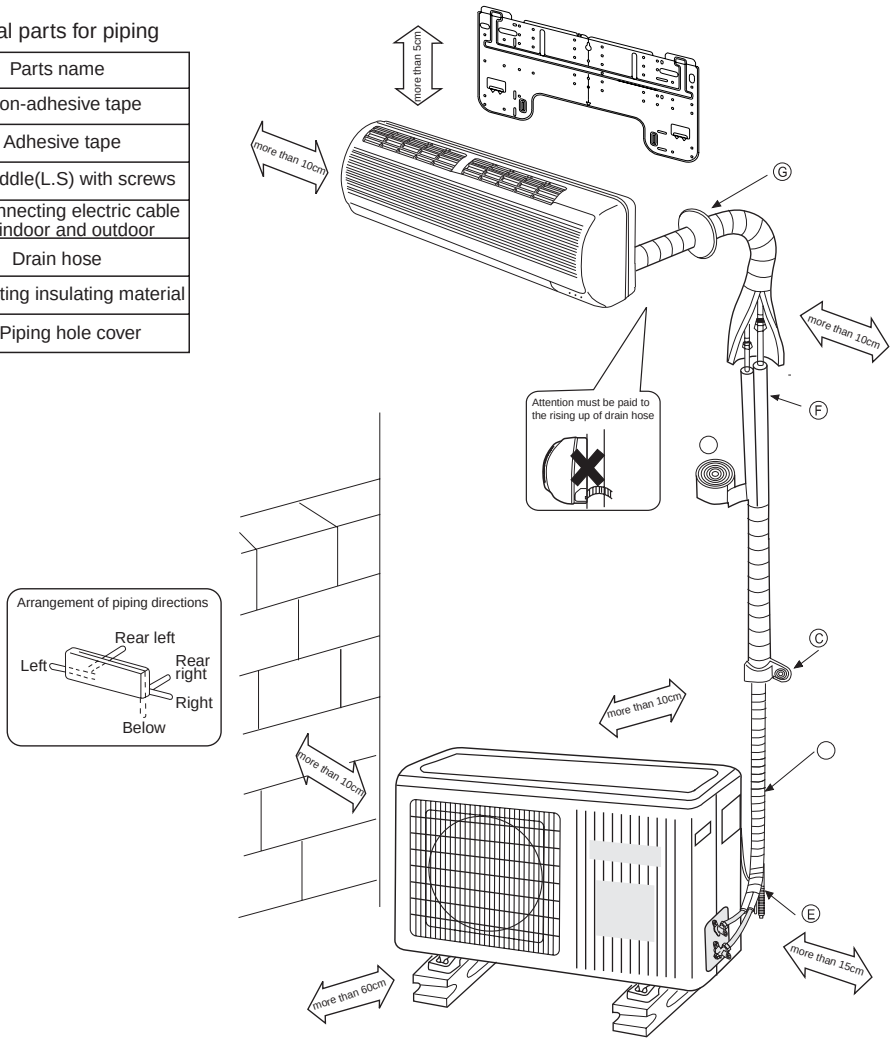

※ The marks from Ⓐ to Ⓖ in the figure are the parts numbers.

※ The distance between the indoor unit and the floor should be more than 2m.

Все каталоги и инструкции здесь: http://splitoff.ru/tehn-doc.html

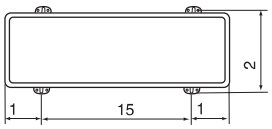

Floor fixing dimensions of the outdoor unit (Unit:mm)

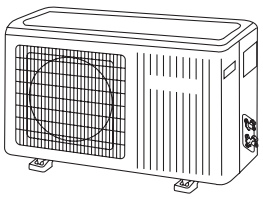

HSU-05C03 HSU-07LD03 HSU-07C03
HSU-05C03C HSU-07LD03C HSU-07C03C
HSU-09LD03 HSU-12LD03 HSU-12LD03C
HSU-09LD03C HEC-05C03 HEC-07C03

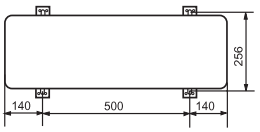

Floor fixing dimensions of the outdoor unit (Unit:mm)

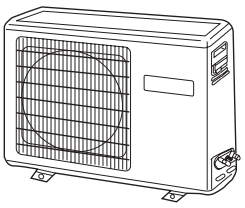

HSU-18CK03
HSU-18CK03C
HEC-18C03

Fixing of outdoor unit

- Fix the unit to concrete or block with bolts(∅10mm) and nuts firmly and horizontally.
- When fitting the unit to wall surface, roof or rooftop, fix a supporter surely with nails or wires in consideration of earthquake and strong wind.
- If vibration may affect the house, fix the unit by attaching a vibration-proof mat.

Selection of Installation Place

Indoor Unit

- Place, robust not causing vibration, where the body can be supported sufficiently.
- Place, not affected by heat or steam generated in the vicinity, where inlet and outlet of the unit are not disturbed.
- Place, possible to drain easily, where piping can be connected with the outdoor unit.
- Place, where cold air can be spread in a room entirely.
- Place, nearby a power receptacle, with enough space around. (Refer to drawings).
- Place where the distance of more than lm from televisions, radios, wireless apparatuses and fluorescent lamps can be left.
- In the case of fixing the remote controller on a wall, place where the indoor unit can receive signals when the fluorescent lamps in the room are lightened.

Outdoor Unit

- Place, which is less affected by rain or direct sunlight and is sufficiently ventilated.
- Place, possible to bear the unit, where vibration and noise are not increased.
- Place, where discharged wind and noise do not cause a nuisance to the neighbors.
- Place, where a distance marked ⇔ is available as illustrated in the above figure.

Power Source

- Before inserting power plug into receptacle, check the voltage without fail. The power source is the same as the corresponding name plate.
- Install an exclusive branch circuit of the power.
- A receptacle shall be set up in a distance where the power cable can be reached. Do not extend the cable by cutting it.

Selection of pipe

- To this unit, both liquid and gas pipes shall be insulated as they become low temperature in operation.
- Use optional parts for piping set or pipes covered with equivalent insulation material.
- The thickness of the pipe must be 0.8mm at least.

	For 05,07,09	For 12,18
Liquid pipe (∅)	6.35mm(1/4")	6.35mm(1/4")
Gas pipe (∅)	9.52mm(3/8")	12.7mm(1/2")

Все каталоги и инструкции здесь: http://splitoff.ru/tehn-doc.html

Indoor unit

1.Fitting of the Mounting Plate and Positioning of the wall Hole

When the mounting plate is first fixed

1.Carry out, based on the neighboring pillars or lintels, a proper leveling for the plate to be fixed against the wall, then temporarily fasten the plate with one steel nail.
2. Make sure once more the proper level of the plate, by hanging a thread with a weight from the central top of the plate, then fasten securely the plate with the attachment steel nail.
3. Find the wall hole location A using a measuring tape

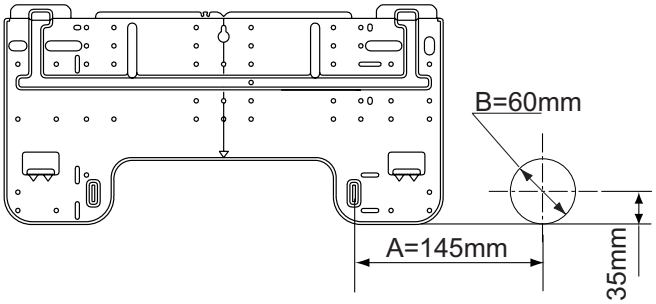

When the mounting plate is fixed side bar and lintel

- Fix to side bar and lintel a mounting bar, Which is separately sold, and then fasten the plate to the fixed mounting bar.
- Refer to the previous article, " When the mounting plate is first fixed ", for the position of wall hole.

2.Making a Hole on the Wall and Fitting the Piping Hole Cover

- Make a hole of B mm in diameter, slightly descending to outside the wall.
- Install piping hole cover and seal it off with putty after installation

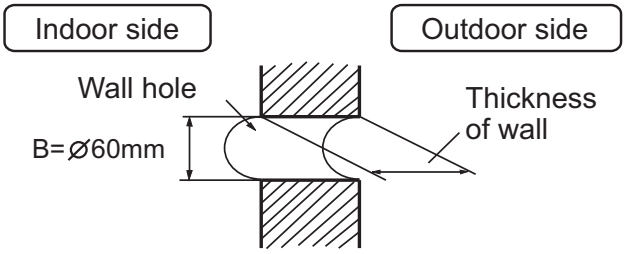

(Section of wall hole) Ⓖ Piping hole pipe

Все каталоги и инструкции здесь: http://splitoff.ru/tehn-doc.html

Indoor unit

3.Installation of the Indoor Unit

Drawing of pipe

[Rear piping]

- Draw pipes and the drain hose, then fasten them with the adhesive tape

[Left • Left-rear piping]

- In case of left side piping, cut away, with a nipper, the lid for left piping.
- In case of left-rear piping, bend the pipes according to the piping direction to the mark of hole for left-rear piping which is marked on heat insulation materials.
  1. Insert the drain hose into the dent of heat insulation materials of indoor unit.
  2. Insert the indoor/outdoor electric cable from backside of indoor unit, and pull it out on the front side, then connect them.
  3. Coat the flaring seal face with refrigerant oil and connect pipes.
     Cover the connection part with heat insulation materials closely, and make sure fixing with adhesive tape

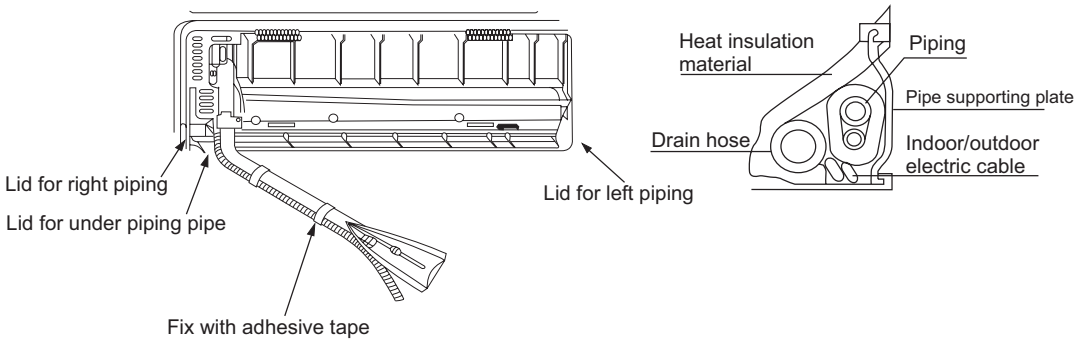

- Indoor/outdoor electric cable and drain hose must be bound with refrigerant piping by protecting tape.

[Other direction piping]

- Cut away, with a nipper, the lid for piping according to the piping direction and then bend the pipe according to the position of wall hole. When bending, be careful not to crash pipes.
- Connect beforehand the indoor/outdoor electric cable, and then pull out the connected to the heat insulation of connecting part specially.

Fixing the indoor unit body

- Hang surely the unit body onto the upper notches of the mounting plate. Move the body from side to side to verify its secure fixing.
- In order to fix the body onto the mounting plate,hold up the body aslant from the underside and then put it down perpendicularly.

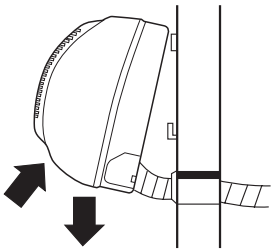

4.Connecting the indoor/outdoor Electric Cable

Removing the wiring cover

- Remove terminal cover at right bottom corner of indoor unit, then
  take off wiring cover by removing its screws.

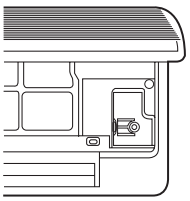

Все каталоги и инструкции здесь: http://splitoff.ru/tehn-doc.html

Indoor unit

When connecting the cable after installing the indoor unit

1. Insert from outside the room cable into left side of the wall hole, in which the pipe has already existed.
2. Pull out the cable on the front side, and connect the cable making a loop.

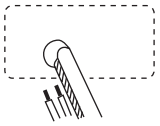

When connecting the cable before installing the indoor unit

- Insert the cable from the back side of the unit, then pull it out on the front side.
- Loosen the screws and insert the cable ends fully into terminal block, then tighten the screws.
- Pull the cable slightly to make sure the cables have been properly inserted and tightened.
- After the cable connection, never fail to fasten the connected cable with the wiring cover.

Note: When connecting the cable, confirm the terminal number of indoor and outdoor units carefully. If wiring is not correct, proper operation can not be carried out and will cause defect.

1. If the supply cord is damaged, it must be replaced by the manufacturer or its service agent or a similar qualified person. The type of connecting wire is H05RN-F or H07RN-F.
2. If the fuse on PC board is broken please change it with the type of T. 3.15A/250V.
3. The wiring method should be in line with the local wiring standard.
4. After installation, the power plug should be easily reached.

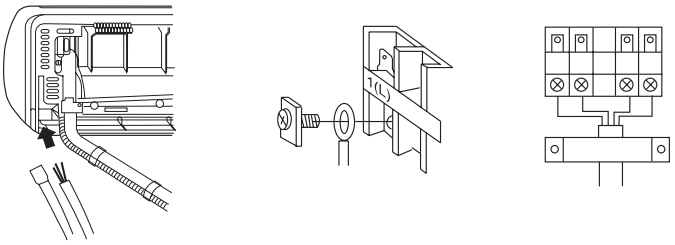

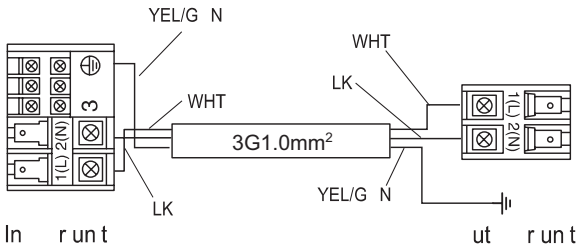

HSU-05C03 HSU-07C03

Power cable:
-mod 05-07-09-12: more than 3G1.5mm²
-mod 18: 3G1.5mm² or 3G2.5mm²

Все каталоги и инструкции здесь: http://splitoff.ru/tehn-doc.html

Outdoor unit

1.Installation of Outdoor Unit

Install according to Drawing for the installation of indoor and outdoor units

2.Connection of pipes

- To bend a pipe, give the roundness as large as possible not to crush the pipe.
- Connecting the pipe of gas side first makes working easier.
- The max vertical distance between the indoor unit and the outdoor unit is 5 m.

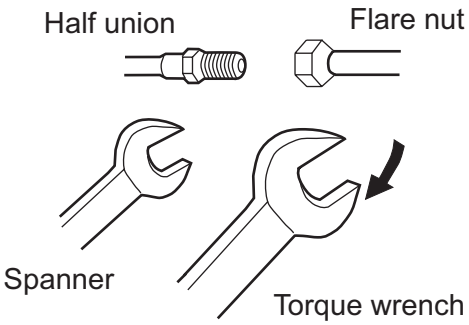

Forced fastening without careful centering may damage the threads and cause a leakage of gas.

Pipe Diameter (ϕ)	Fastening torque
Liquid side 6.35mm(1/4")	18N.m
Liquid side 9.52mm(3/8")	40N.m
Gas side 9.52mm(3/8")	42N.m
Gas side 12.7mm(1/2")	55N.m
Gas side 15.88mm(5/8")	60N.m

Be careful that matters, such as wastes of sands, etc. shall not enter the pipe.

3.Connection

- Use the same method on indoor unit. Loosen the screws on terminal block and insert the plugs fully into terminal block, then tighten the screws.
- Insert the cable according to terminal number in the same manner as the indoor unit.
- If wiring is not correct, proper operation can not be carried out and controller may be damaged.
- Fix the cable with a clamp.

4.Attaching Drain-Elbow

- If the drain-elbow is used, please attach it as figure.

Note: Only for heat pump unit.

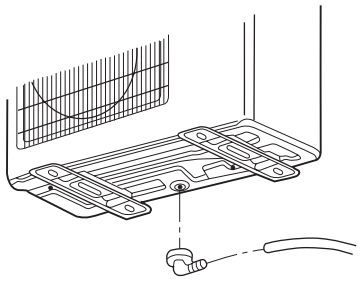

Все каталоги и инструкции здесь: http://splitoff.ru/tehn-doc.html

Outdoor unit

5. Purging Method:

Push the air out of the indoor unit and piping as followes:

(1)Remove the valve cap on 2-way valve in outdoor unit.

(2)Loosen by 1/2 turn the flare nut of gas pipe, which is connected to 3-way valve.

(3)Loosen 2-way valve by 90° using hexagon wrench, and after approx 6 sec tighten it up. Gas comes out through flare nut on wide pipe. If no gas is discharged, tighten flare nut with specified torque.

(4)Open 2-way and 3-way valves using specified torque.

(5)Tighten the caps on the valves with specified torque.

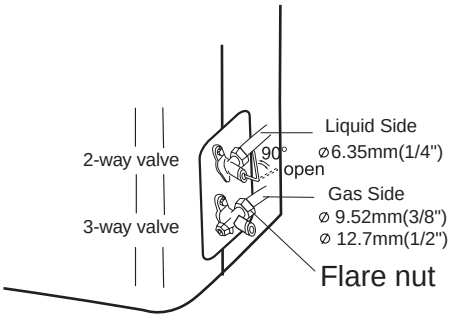

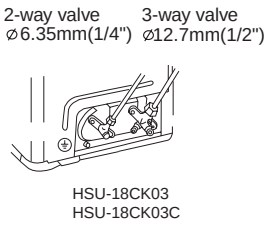

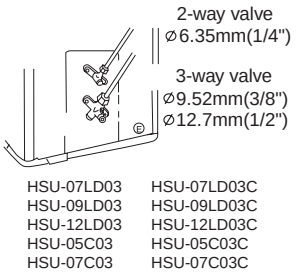

	Tighten torque N.m
Valve rod	7-9
Valve cap	20-25

- When connecting pipe exceeds 5 meters, 16g refrigerant shall be added per exceeding meter. Charge according to the following list.

Piping length	5m	7m	10m
Additional amount	No need	32g	80g

- Note: When extending piping, air inside piping shall be removed by using external refrigerant gas, then discharge excess refrigerant by air purging.
  Brand new outdoor unit is charged 50g more refrigerant than regulated weight.
  Only for first installation, this extra 50g can be used to purge air in the pipes.

★ 1 During this procedure, 50g refrigerant will be discharged in piping.
(This must be strictly controlled with 90° and 6sec

Все каталоги и инструкции здесь: http://splitoff.ru/tehn-doc.html

1.Power Source Installation

- The power source must be exclusively used for air conditioner. (Over I0A)
- In the case of installing an air conditioner in a moist place, please install an earth leakage breaker.
- For installation in other places, use a circuit breaker as far as possible.

2.Cutting and Flaring Work of Piping

- Pipe cutting is carried out with a pipe cutter and burs must be removed.
- After inserting the flare nut, flaring work is carried out.

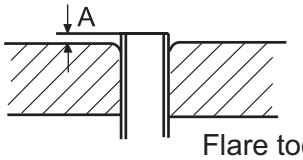

Flare tooling die

	Pipe Diameter(Φ)	Size A (mm)
Liquid side	6.35mm(1/4")	0.8-1.5
Liquid side	9.52mm(3/8")	1.0-1.8
Gas side	9.52mm(3/8")	1.0-1.8
Gas side	12.7mm(1/2")	1.2-2.0
Gas side	15.88mm(5/8")	1.2-2.0

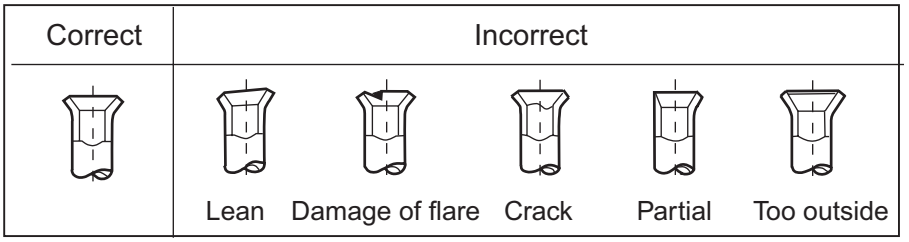

3.On Drainage

- Please install the drain hose so as to be downward slope without fail.
- Please don't do the drainage as shown below.

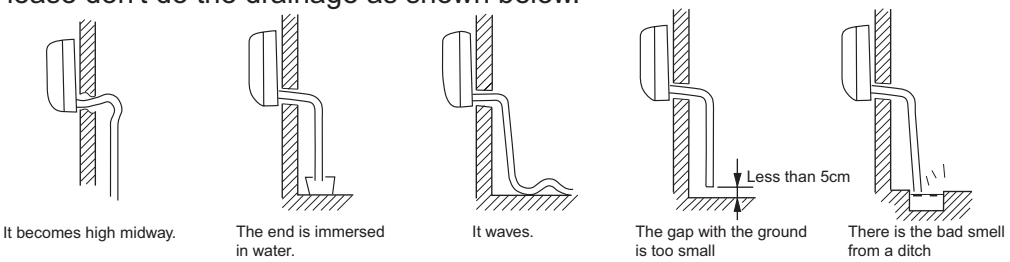

- Please pour water in the drain pan of the indoor unit, and confirm that drainage is carried out surely to outdoor.
- In case that the attached drain hose is in a room, please apply heat insulation to it without fail.

Check for Installation and Test Run

- Please kindly explain to our customers how to operate through the instruction manual.

Check Items for Test Run

☐ Put check mark ✓ in boxes

☐ Gas leak from pipe connecting?
☐ Are the connecting wirings of indoor and outdoor firmly inserted to the terminal block?
☐ Is the connecting wiring of indoor and outdoor firmly fixed?
☐ Is drainage securely carried out?
☐ Is the earth line securely connected?
☐ Is the indoor unit securely fixed?
☐ Is power source voltage abided by the code?
☐ Is there any noise?
☐ Is the lamp normally lighting?
☐ Are cooling and heating (when in heat pump) performed normally?
☐ Is the operation of room temperature regulator normal?

Все каталоги и инструкции здесь: http://splitoff.ru/tehn-doc.html

9. Removal Procedure

Indoor unit

9.1 Removal of Air Filter

Procedure

Warning Be sure to wait 10 minutes or more after turning off all power supplies before disassembling work.

Step		Procedure	Points
1. Features			
2. Remove the air filters.			
1	Hold the front panel by the tabs on the both sides and lift it until it stops with a click.	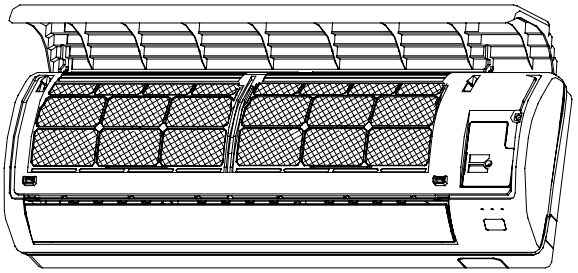	

Все каталоги и инструкции здесь: http://splitoff.ru/tehn-doc.html

Step	Procedure		Points
3	Lift an air filter upwards slightly and then pull it out downwards.	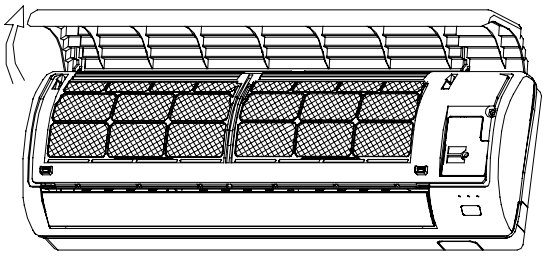 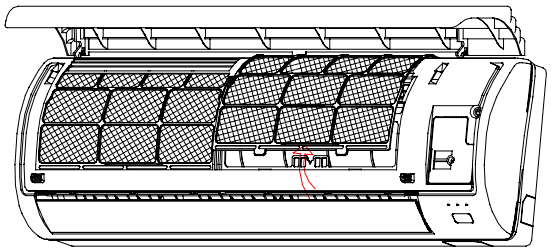 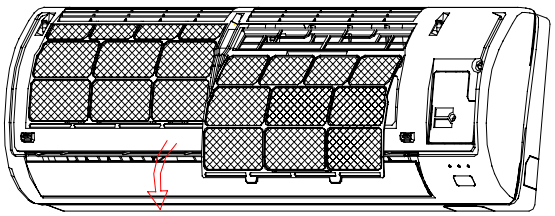	■ Insert the air filters along grooves when installing. ■ When installing, insert 2 hooks of the air filter completely.

Все каталоги и инструкции здесь: http://splitoff.ru/tehn-doc.html

9.2 Removal of Front Grille

Procedure

Warning Be sure to wait 10 minutes or more after turning off all power supplies before disassembling work.

Step	Procedure		Points
1. Remove the front panel.			
1	Open the front panel to the horizontal position. Release the both sides pivots and remove the front panel.	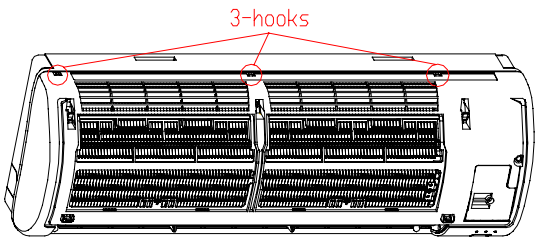 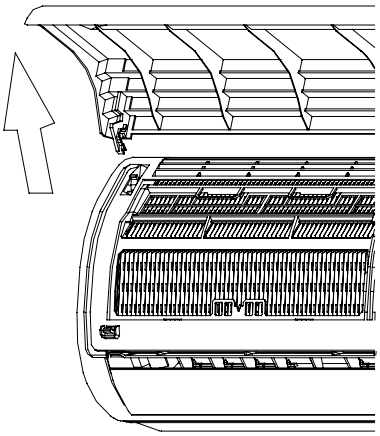 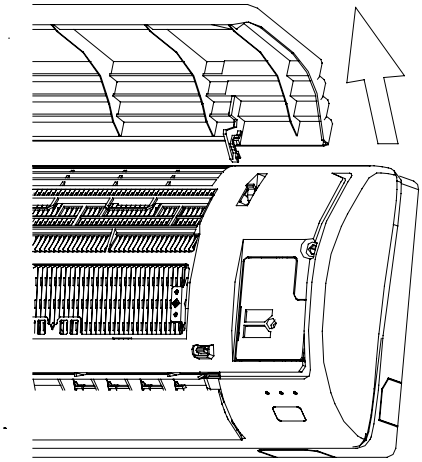	■ Start the removal procedure of front grille when the panels are closed. ■ Slide the front panel side to side to release each axis. ■ When assembling, align the right and left axes with grooves in turn and insert them to the end.

Все каталоги и инструкции здесь: http://splitoff.ru/tehn-doc.html

Step	Procedure		Points
2	Release the marked four hooks.	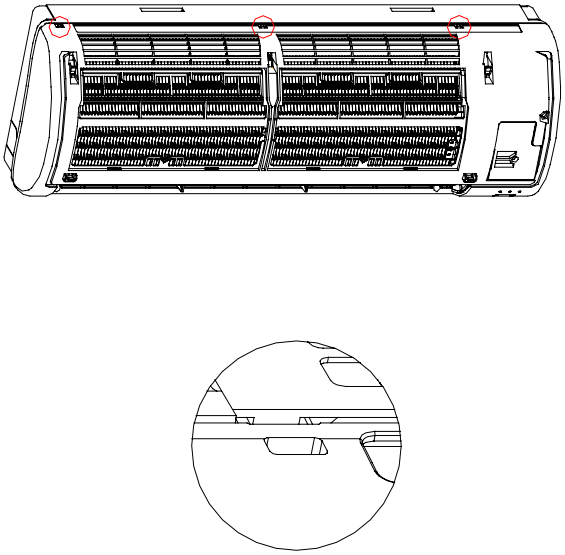	
3	Loosen the marked four screws	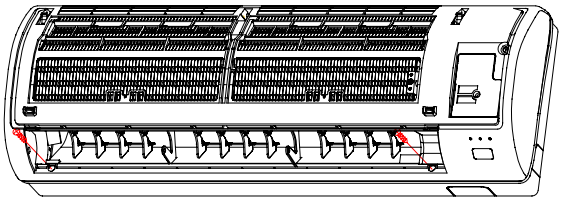	
4	Pull the front grille out horizontally and remove it.	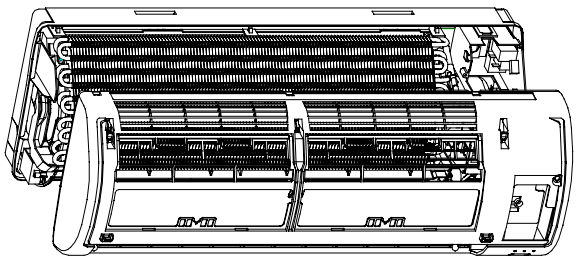	■ When assembling, install the front grille horizontally so as not to stuff the flap inside. ■ When assembling, make sure the three hooks are caught properly.

Все каталоги и инструкции здесь: http://splitoff.ru/tehn-doc.html

9.3 Removal of Drain pan

Procedure

Warning Be sure to wait 10 minutes or more after turning off all power supplies before disassembling work.

Step	Procedure	Points
1. Remove the Drain pan		
1	Loosen the marked screws under the screw covers	
2	Lift up the lower part of the grille to release the hook on the upper backside.	
3	Rotate the upper part of the grille to release the hook on the lower back side. Pull out the drain pan	

Все каталоги и инструкции здесь: http://splitoff.ru/tehn-doc.html

9.4 Removal of Vertical Blades and Swing Motor

Procedure

Warning Be sure to wait 10 minutes or more after turning off all power supplies before disassembling work.

Step	Procedure	Points
■ Remove the assembly of the outlet grille.		
1. Remove the vertical blades.		
1	Push the hooks on the back of the vertical blades and remove.	

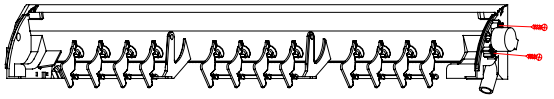

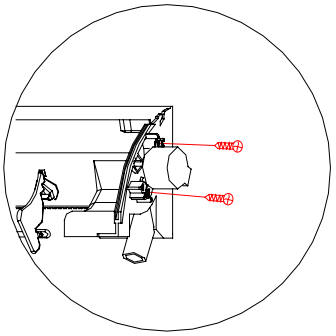

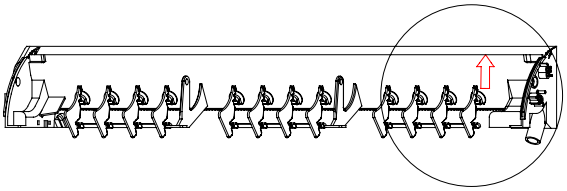

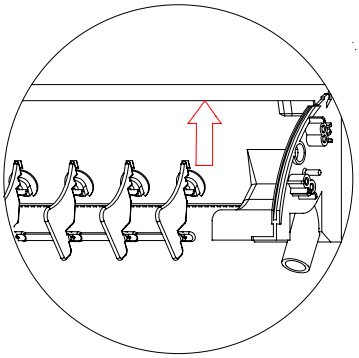

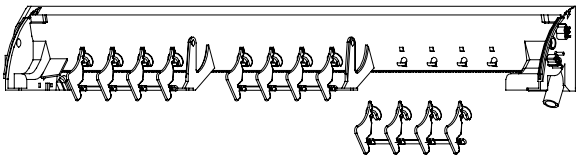

Все каталоги и инструкции здесь: http://splitoff.ru/tehn-doc.html

9.5 Removal of Electrical Box

Procedure

Warning Be sure to wait 10 minutes or more after turning off all power supplies before disassembling work.

Step	Procedure		Points
■ Remove the front grille.			■ Discharge the static electricity from your body before touching the electrical parts like signal receiver PCB. It may cause malfunction of PCB.
1. Remove the electrical box.			
1	Loosen the screw of the drip proof plate.	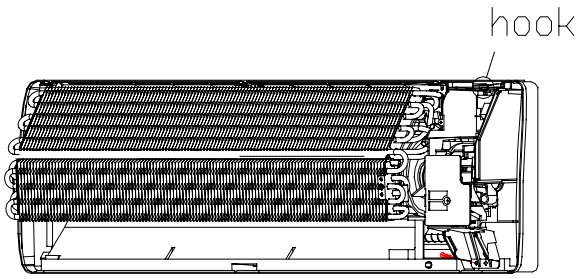	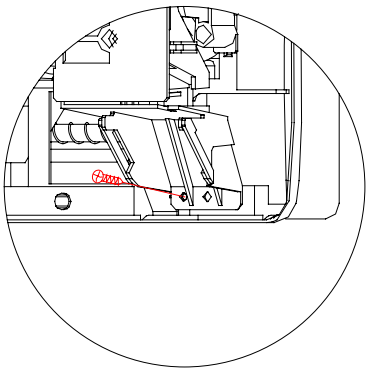
2	Lift and remove the electrical box.	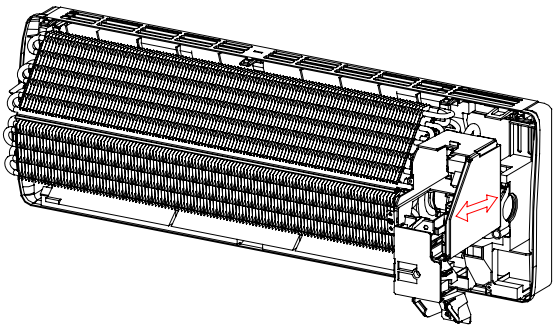	■ When assembling, insert the left hook of the drip proof plate into the hem plate of the heat exchanger.

Все каталоги и инструкции здесь: http://splitoff.ru/tehn-doc.html

9.6 Removal of Heat Exchanger

Procedure

Warning Be sure to wait 10 minutes or more after turning off all power supplies before disassembling work.

Step	Procedure		Points
			■ You can detach the indoor unit without removing the assembly of the outlet grille.
1	Loosen the screws fixed to the installation plate.	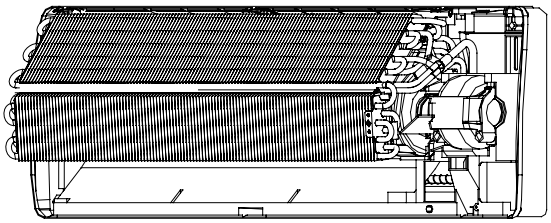	Caution If gas leaks, repair the spot of leaking, then collect all refrigerant from the unit. After conducting vacuum drying, recharge proper amount of refrigerant.
2	Loosen the marked hooks	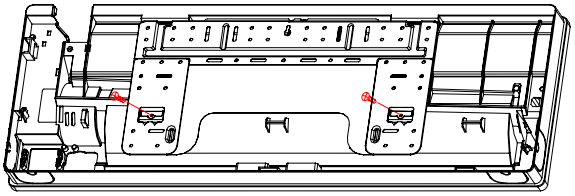	Caution Do not contaminate any gas (including air) other than the specified refrigerant (R410A), into refrigerant cycle. (Contaminating of air or other gas causes abnormal high pressure in refrigerating cycle, and this results in pipe breakage or personal injuries.)
3	Loosen the marked screws and remove mounting plate	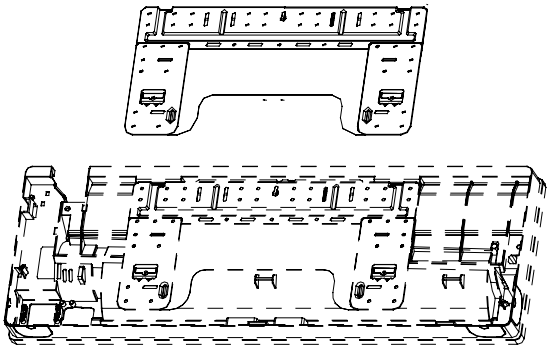	■ Pay attention so that the residual water in the drain will not make the floor wet. ■ In case that a drain hose is buried inside a wall, remove it after the drain hose in the wall is pulled out. ■ Use two wrenches to disconnect pipes. ■ When disconnecting pipes, cover every nozzle with caps so as not to let dust and moisture in.

Все каталоги и инструкции здесь: http://splitoff.ru/tehn-doc.html

Step	Procedure	Points
1	Release the hooks	
2	Release the hook from the back side. Lift up the lower part of the fixture plate and remove it.	
6	Remove the heat exchanger	

Все каталоги и инструкции здесь: http://splitoff.ru/tehn-doc.html

9.7 Removal of Fan Rotor and Fan Motor

Procedure

Warning Be sure to wait 10 minutes or more after turning off all power supplies before disassembling work.

Step	Procedure		Points
1. Remove the right side plate.			
1	Loosen the 2 screws.	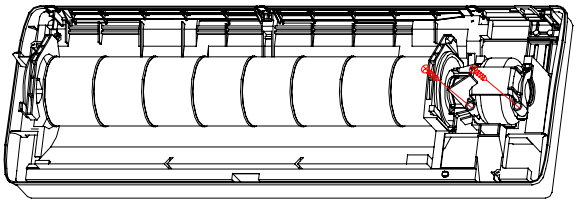	
2	Remove the fixing plate.	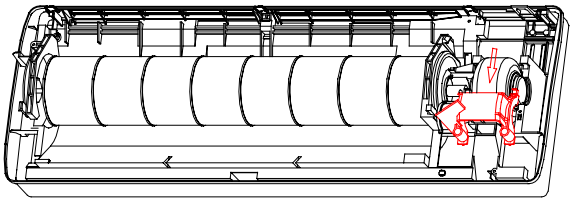 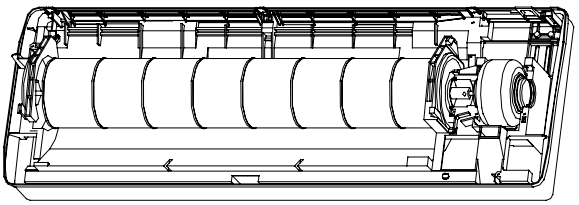 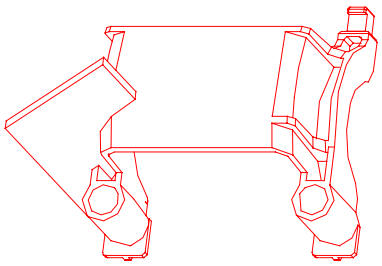	

Все каталоги и инструкции здесь: http://splitoff.ru/tehn-doc.html

Step	Procedure	Points
3. Remove the fan.		
1	Loosen the marked screw. 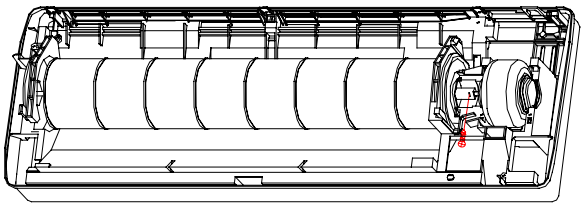	
2	Lift up the right part of the fan motor and slide it to the rightward to remove. 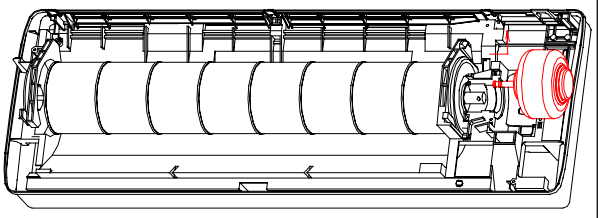	
3	Lift up the right part of the fan and remove it 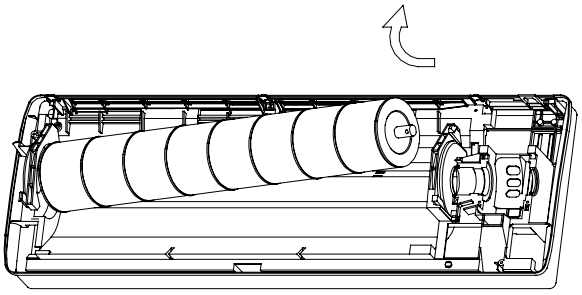 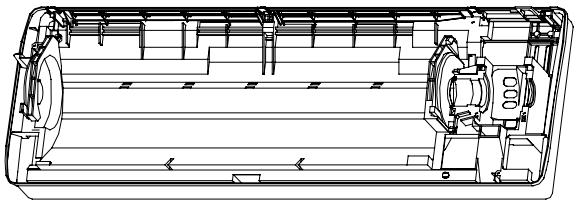 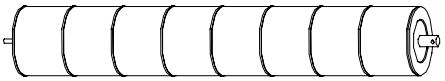	

Все каталоги и инструкции здесь: http://splitoff.ru/tehn-doc.html

Outdoor unit

9.8 Removal of Outdoor panel

Procedure

Warning Be sure to wait 10 minutes or more after turning off all power supplies before disassembling work.

Step	Procedure		Points
1. Features			
1	Loosen the service cover screw and remove the service cover.	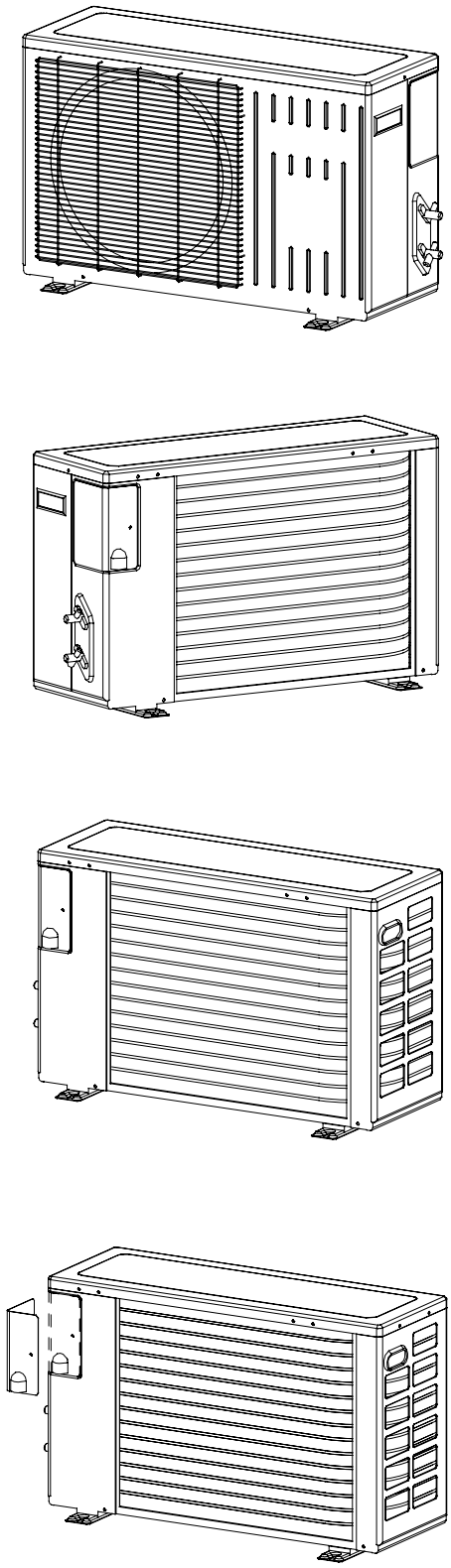	■ Be careful not to cut your finger by the fins of the heat exchanger.

Все каталоги и инструкции здесь: http://splitoff.ru/tehn-doc.html

Step	Procedure	Points
2. Remove the panels.		
1	Loosen the 4 screws and lift the top panel	

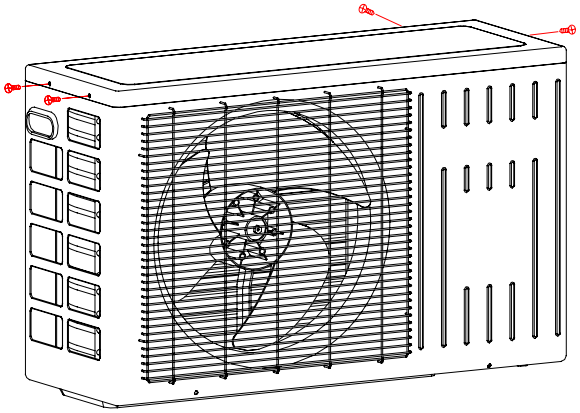

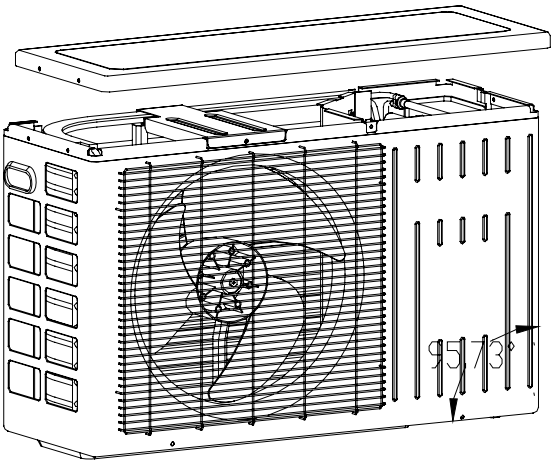

Все каталоги и инструкции здесь: http://splitoff.ru/tehn-doc.html

Step	Procedure	Points
2	Loosen the screws of the panel. 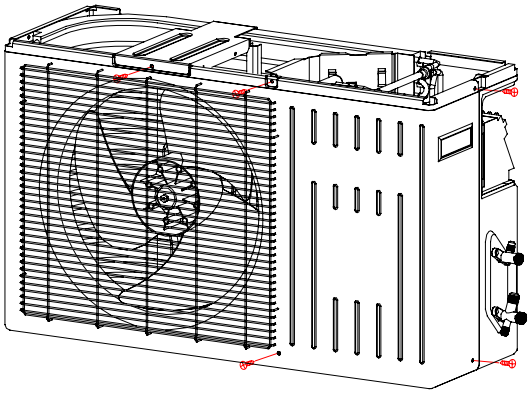 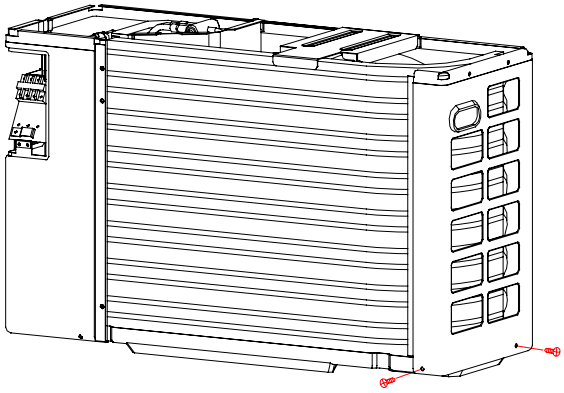 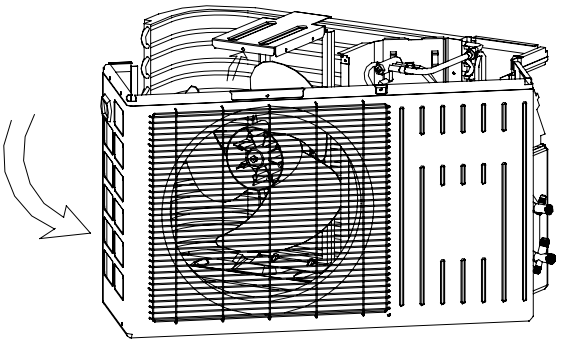	

Все каталоги и инструкции здесь: http://splitoff.ru/tehn-doc.html

Step	Procedure	Points
3	Pull and remove the front panel. 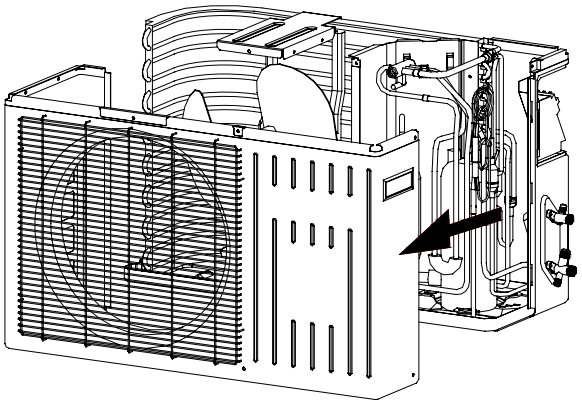 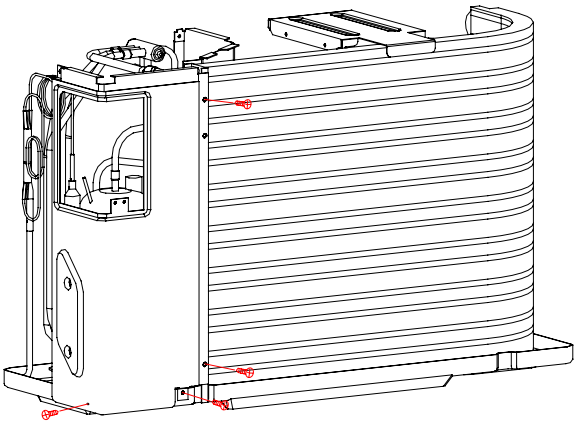 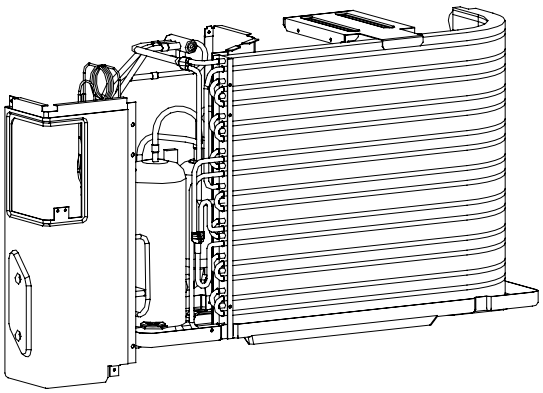	

Все каталоги и инструкции здесь: http://splitoff.ru/tehn-doc.html

9.9 Removal of Electrical Box

Procedure

Warning Be sure to wait 10 minutes or more after turning off all power supplies before disassembling work.

Step	Procedure		Points
1	Remove the fixing screws Then lift the electrical box	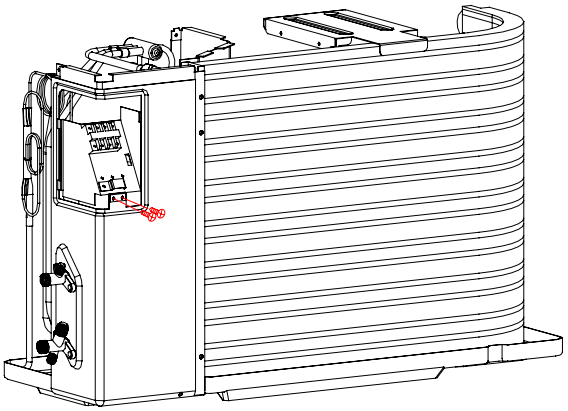	
		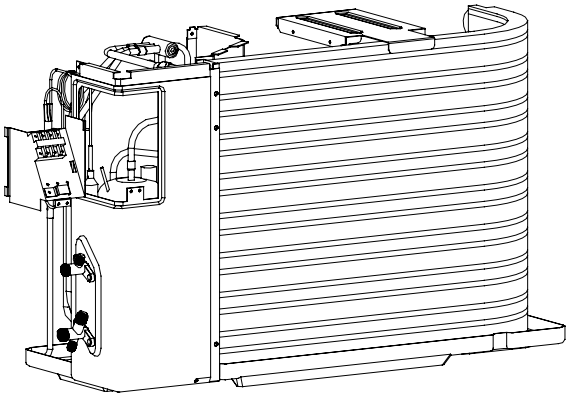	

Все каталоги и инструкции здесь: http://splitoff.ru/tehn-doc.html

9.10 Removal of Fan and Fan Motor

Procedure

Warning Be sure to wait 10 minutes or more after turning off all power supplies before disassembling work.

Step	Procedure		Points
1	Loosen the fixing screw and remove the fan	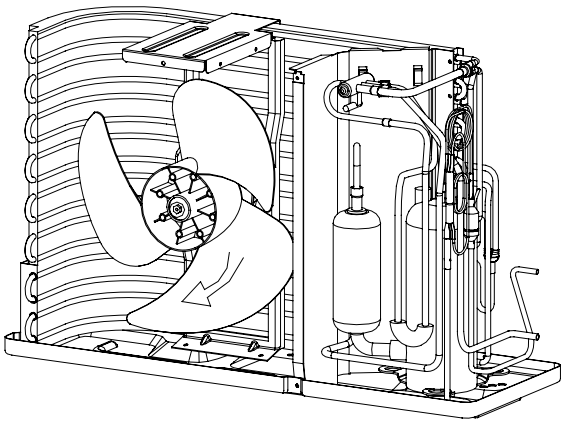 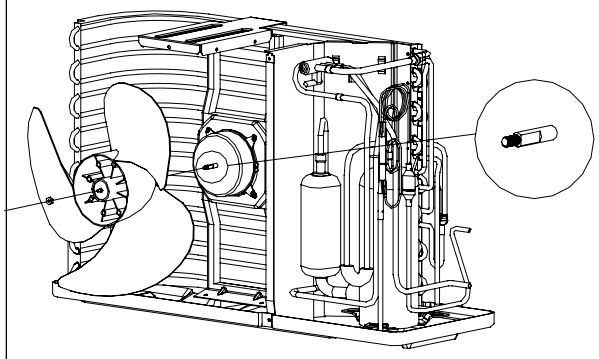 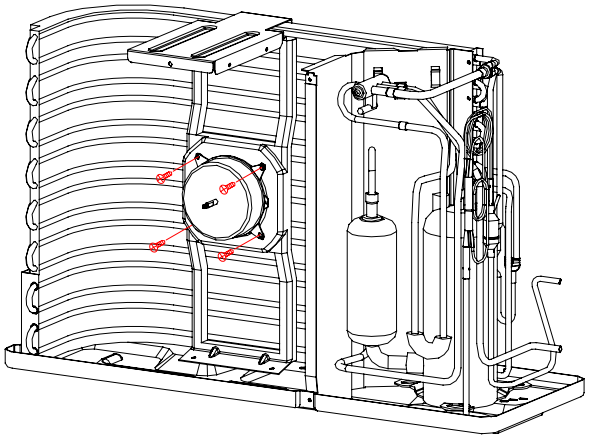	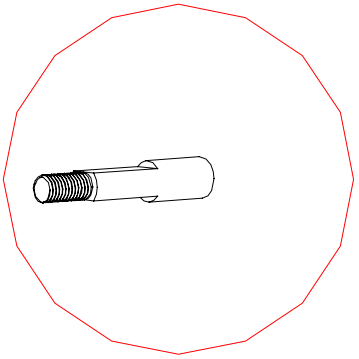 ■ Put the lead wire through the back of the motor when assembling. (so as not to be entangled with the propeller fan)

Все каталоги и инструкции здесь: http://splitoff.ru/tehn-doc.html

9.11 Removal of fan motor bracket and partition

Procedure

Warning Be sure to wait 10 minutes or mo
before disassembling work.

Step	Procedure		Points
1	Loosen the fixing screws and lift the fan motor bracket .	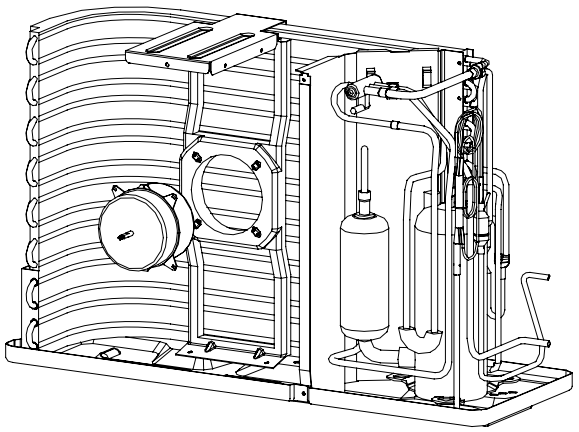 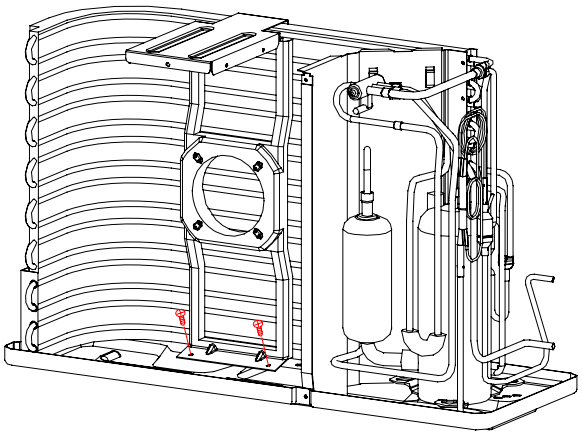 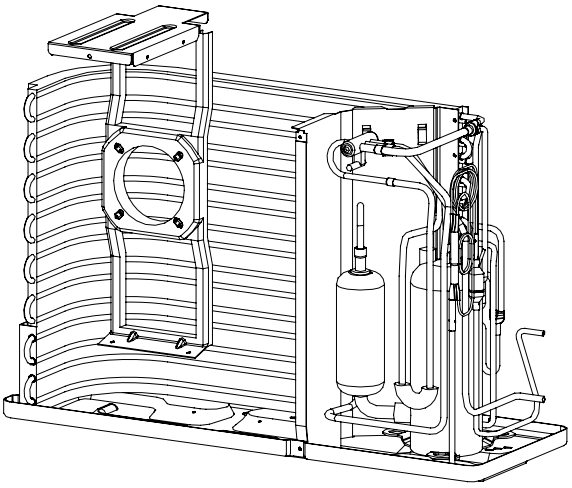	

Все каталоги и инструкции здесь: http://splitoff.ru/tehn-doc.html

Step	Procedure		Points
3	Loosen the 2 screws	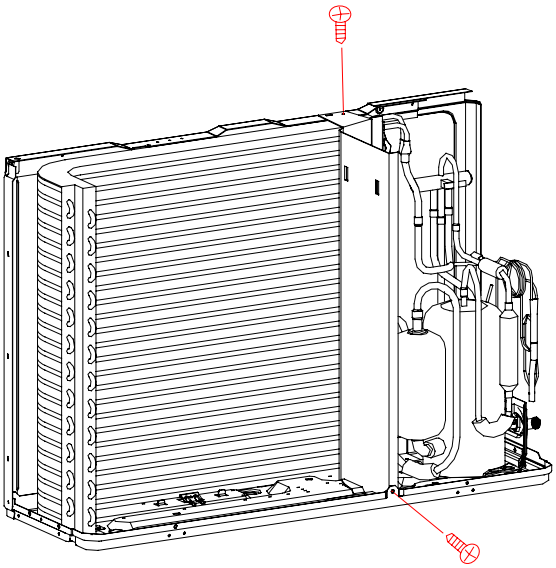	
4	The partition plate has a hook on the lower side.Lift and pull the partition plate to remove.	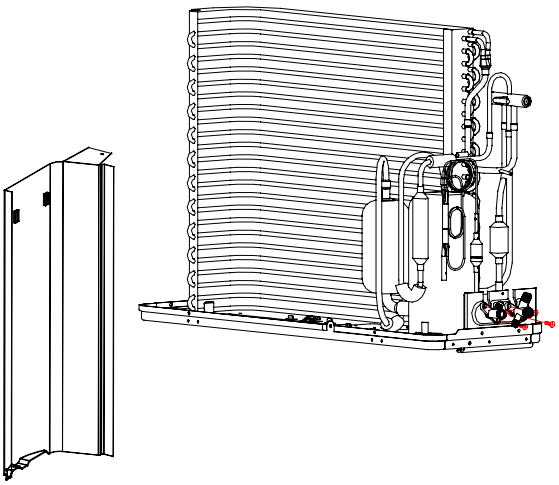	■ When assembling ,fit the lower hook into the bottom frame .
5	Loosen the marked fixing screws	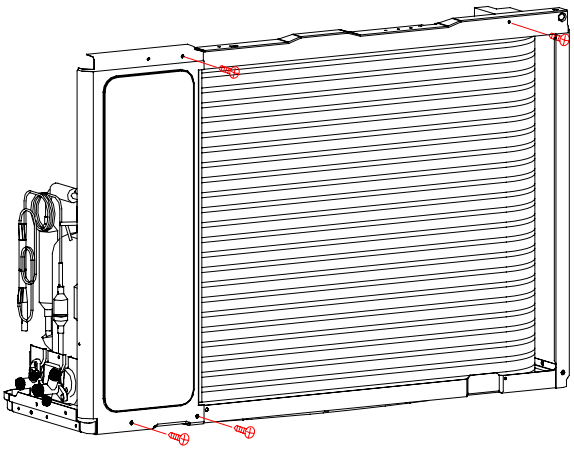	

Все каталоги и инструкции здесь: http://splitoff.ru/tehn-doc.html

9.12 Removal of compressor and heat exchanger

Procedure

Warning Be sure to wait 10 minutes or more after tu
before disassembling work.

Step	Procedure		Points
1	Loosen the marked screw .	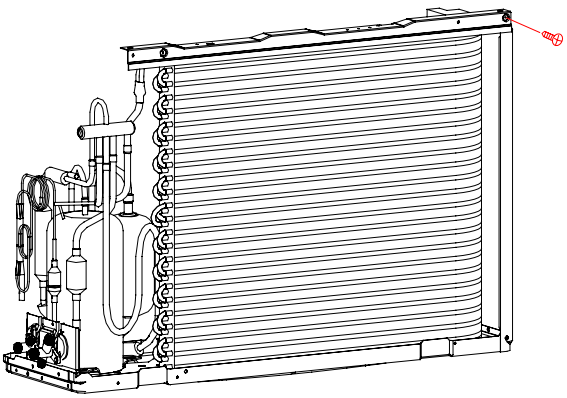	
2	Cut down the conecting pipe and pull out the compressor and remove the valve bracket .	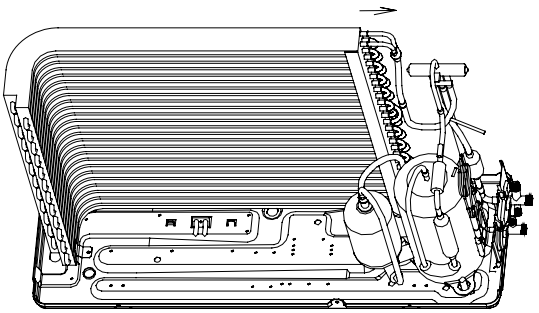 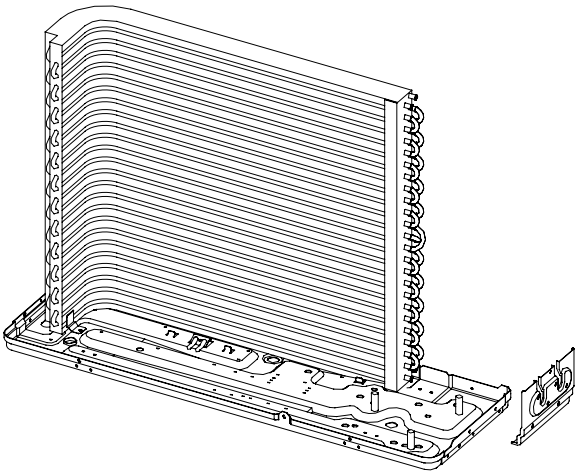	

Все каталоги и инструкции здесь: http://splitoff.ru/tehn-doc.html

Step	Procedure		Points
3	Loosen the marked fixing screw .	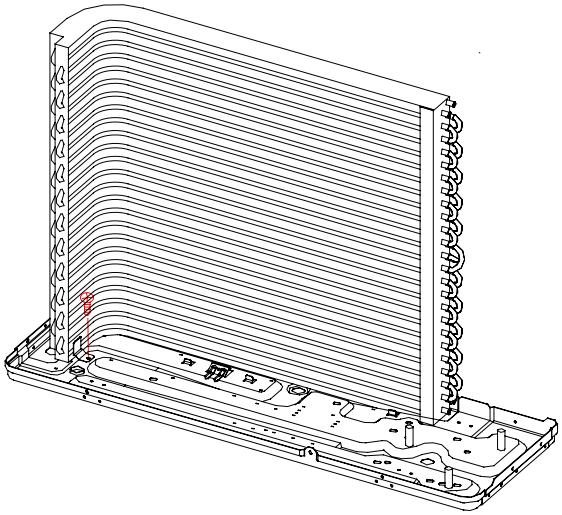	
4	Loosen the fixing hook and remove the heat exchanger .	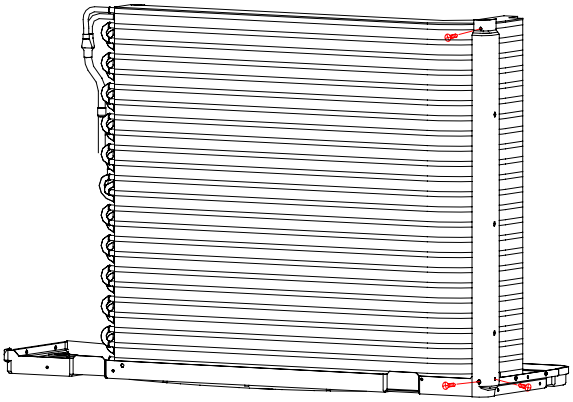 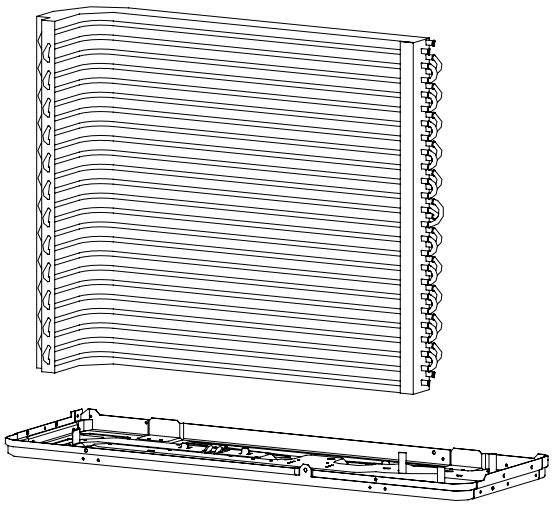	

Все каталоги и инструкции здесь: http://splitoff.ru/tehn-doc.html

10. Appendix

10.1 Piping Diagrams

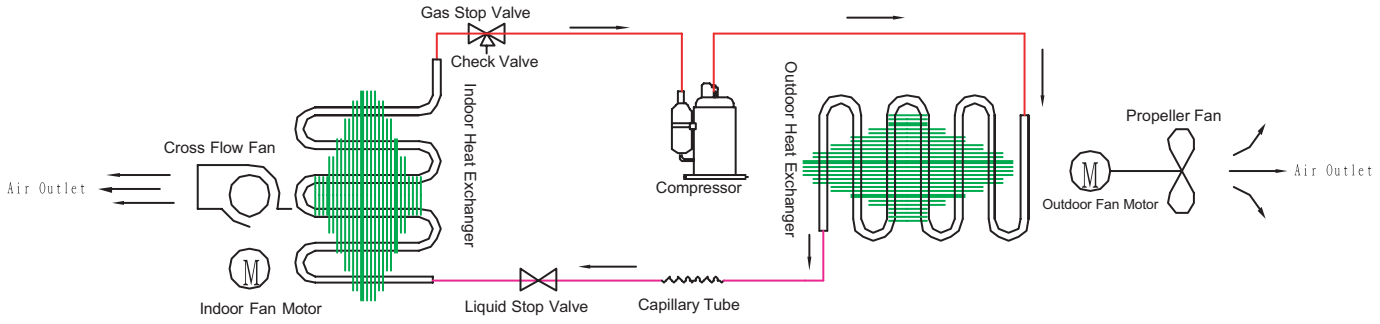

Все каталоги и инструкции здесь: http://splitoff.ru/tehn-doc.html

10.2 Wiring Diagrams

Indoor unit

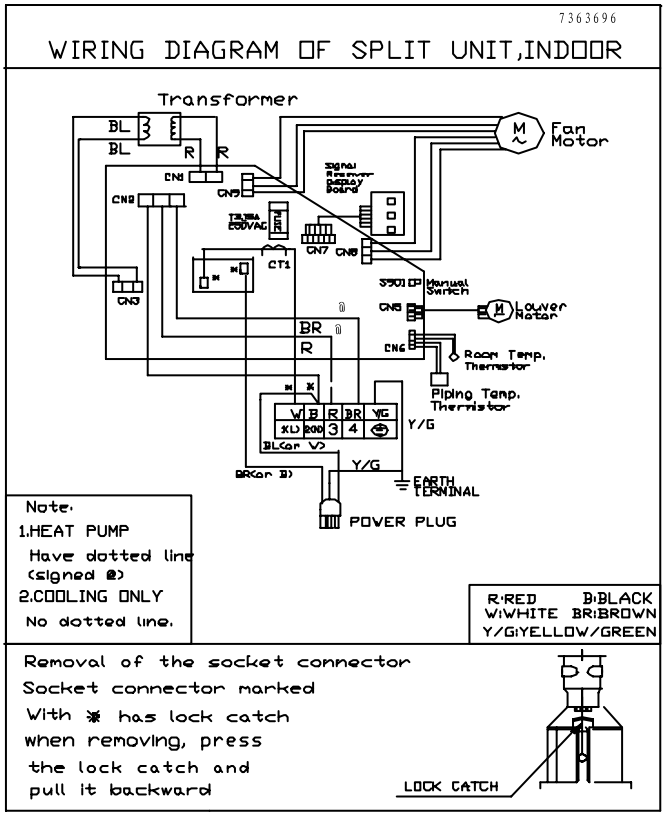

Outdoor unit

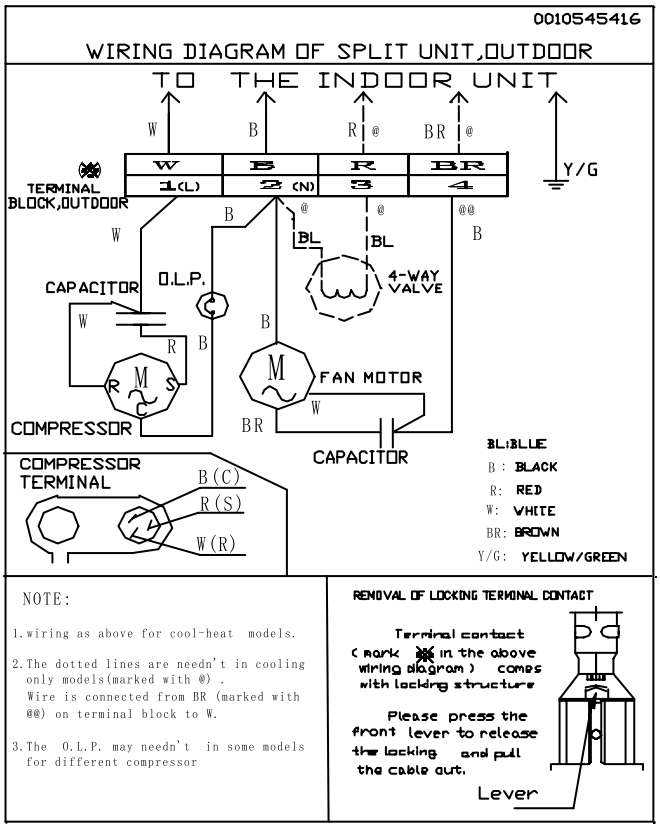

Все каталоги и инструкции здесь: http://splitoff.ru/tehn-doc.html

10.3 Circuit Diagrams

Indoor Unit

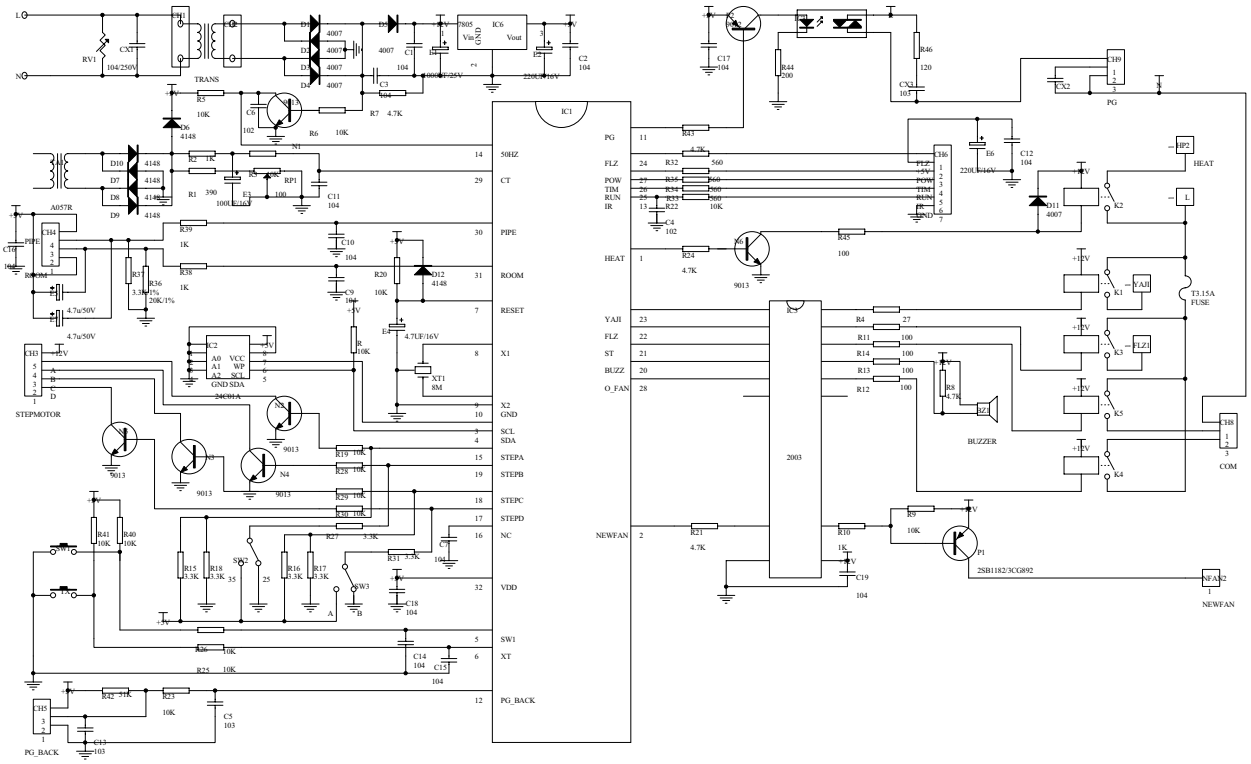

Все каталоги и инструкции здесь: http://splitoff.ru/tehn-doc.html

Sincere Forever

Haier Group

Haier Industrial Park, No.1, Haier Road

266101, Qingdao, China_

E-mail: hractech@haier.com

Tel: +86 532 87636957

Http://www.haier.com

Edited by: Zhao Jicheng

Signed by: Yang Bifei

Approved by: Zhu Zhenxue

splitoff.ru

Большая библиотека технической документации
http://splitoff.ru/tehn-doc.html
каталоги, инструкции, сервисные мануалы, схемы.